FUJITSU

Halcyon XLTR
Extra Low Temperature H

Inspections Division
Date: 02/02/17

Submittal Data: 18RLXFZH — **18,000 BTU Multi Zone System**

Inverter Driven Heat Pump

Job Name: Thomas Bohan

Date: 1-9-17

Location: 54 Pleasant Ave, Peaks Island

Approval:

Engineer: n/a

Construction:

Submitted to: City of Portland

Unit #:

Submitted by: Goggin Energy

Drawing #:

Reference: n/a

General Features

- Refrigerant Type R410A.
- Extra long piping allotment
- Wired and wireless remote controllers
- Automatic airflow adjustment
- Economy operation
- Base pan heater
- 5- Years Parts, 7-Years Compressor Warranty (See Warranty Statement for details)
- 24 hr. Timer
- Low operating temperature

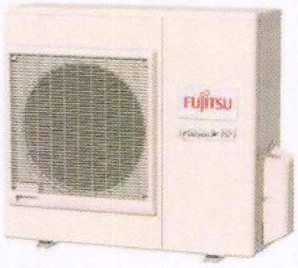

Model Information

Condenser AOU18RLXFZH
Evaporator*1 ..... (ASU) / (ARU) / (AGU) / (AUU) 7,9,12RLF(1)
Connectable indoor units 2
Total capacity range ..... 14,000 – 21,000 Btu/h

Electrical ..... 208/230V AC 1ph-60Hz

Available Voltage Range ..... 208/230 +/- 10%
Minimum Circuit Ampacity ..... 19.7 A
Max Fuse Size ..... 20 A
Max Starting Current ..... 7.9 A

Input Power

Cooling ..... (non-duct) 1.33 kW / (ducted) 1.45 kW / (mix) 1.39 kW
Heating ..... (non-duct) 1.70 kW / (ducted) 1.79 kW / (mix) 1.74 kW

Current

Cooling ..... (non-duct) 5.8 A / (ducted) 6.4 A / (mix) 6.1 A
Heating ..... (non-duct) 7.5 A / (ducted) 7.9 A / (mix) 7.7 A

Capacity

Nominal Cooling ..... 18,000 Btu/h
Min-Max Cooling ..... 6,100 – 21,000 Btu/h
Nominal Heating ..... 22,000 Btu/h
Min-Max Heating ..... 6,800 – 24,400 Btu/h

Compressor ..... Rotary (inv x1)

Motor Output ..... 1,100 W
Refrigerant R410a
Charge ..... 4 lbs. 3 oz
Oil RB68

Fan Motor

(Condenser) Type: DC ..... Propeller x1
(Condenser) Motor Output ..... 100 W
(Evaporator) Type: DC ..... (wall-mount) Cross flow
(compact cassette) Turbo
(ducted) Sirocco
(floor) Cross flow x2
(Evaporator) Motor Output ..... (wall) 30W-42W (compact cassette) 54W (ducted) 80-81W
(floor) 16W

Heat Exchanger

Dimensions
(H x W x D) in. (mm) ..... 31-7/16 x35-7/16 x 1-7/16 (798x900x36.38)
Fin Pitch ..... 20 FPI
Rows x Stages ..... 2 x 38
Pipe Type (Material) ..... Copper
Fin Type (Material) ..... Aluminum

Operation Temperature Range

Cooling ..... 14°F - 115°F (-10°C - 46°C)
Heating ..... -15°F - 75°F (-26°C - 24°C)

Efficiency

SEER*2 ..... (wall-mount) 21.5 (duct) 19 (mix) 20.3
EER (cooling) ..... (wall-mount) 13.5 Btu/W (duct) 12.4 Btu/W (mix) 13 Btu/W
COP (heating) ..... (wall-mount) 3.79 W/W (duct) 3.60 W/W (mix) 3.70 W/W
HSPF (heating) ..... (wall-mount) 10.3 (duct) 9 (mix) 9.7

Enclosure (Condenser)

Material ..... Painted galvanized steel
Color ..... Beige (10 YR 7.5/1.0 NN)

Sound Pressure Level

Condenser ..... 48 dB(A)

Dimensions

H x W x D
Condenser
Net in. (mm) ..... 32-11/16 x 35-7/16 x 13 (830x900x330)
Gross in. (mm) ..... 38-3/16 x 41-5/16 x 17-1/2 (970x1,050x445)

Connection Pipe

Liquid ..... 1/4" x2
Gas ..... 3/8" x2
Method (Liquid/Gas) ..... Brazing
Max Length (Pre-charge) ..... 164ft. (50m) / (98 ft. {30m})
Max Height Difference ..... 49 ft. (15m)

Weight

Condenser ..... 134 lbs. (61 kg)
Evaporators ..... (wall-mount) 19 lbs. - 31 lbs.
(compact cassette) 33 lbs.
(ducted) 37 lbs. - 49 lbs.
(floor) 31 lbs.

Accessories

Wired Remote Controller ..... UTY-RVNUM
Wired Remote Controller ..... UTY-RNNUM
Simple Remote Controller ..... UTY-RSNUM

*1 Reference brochure for approved combinations. *2 Test conditions are based on AHRI 210/240.
Note: Specifications are based on the following conditions. Cooling: Indoor temperature of 80°F (26.7°C) DB/67°F (19.44°C) WB, and outdoor temperature of 95°F (35°C) DB/75°F (23.9°C) WB. Heating: Indoor temperature of 70°F (21.11°C) DB/59°F (15.°C) WB, and outdoor temperature of 47°F (8.33°C) DB/43°F (6.11°C) WB. Pipe length: 24ft. 7in. (7.5m), Height difference: 0ft. (0m) (Outdoor unit – indoor unit)

Fujitsu General America, Inc.
353 Route 46 West
Fairfield, NJ 07004
Toll Free: 1-888-888-3424
Fax: (973) 836-0447
www.fujitsugeneral.com

FUJITSU

Halcyon XLTR

Extra Low Temperature Heating

Inspections Division
Date: 02/02/17

Dimensions:18RLXFZH

[Unit: in. (mm)]

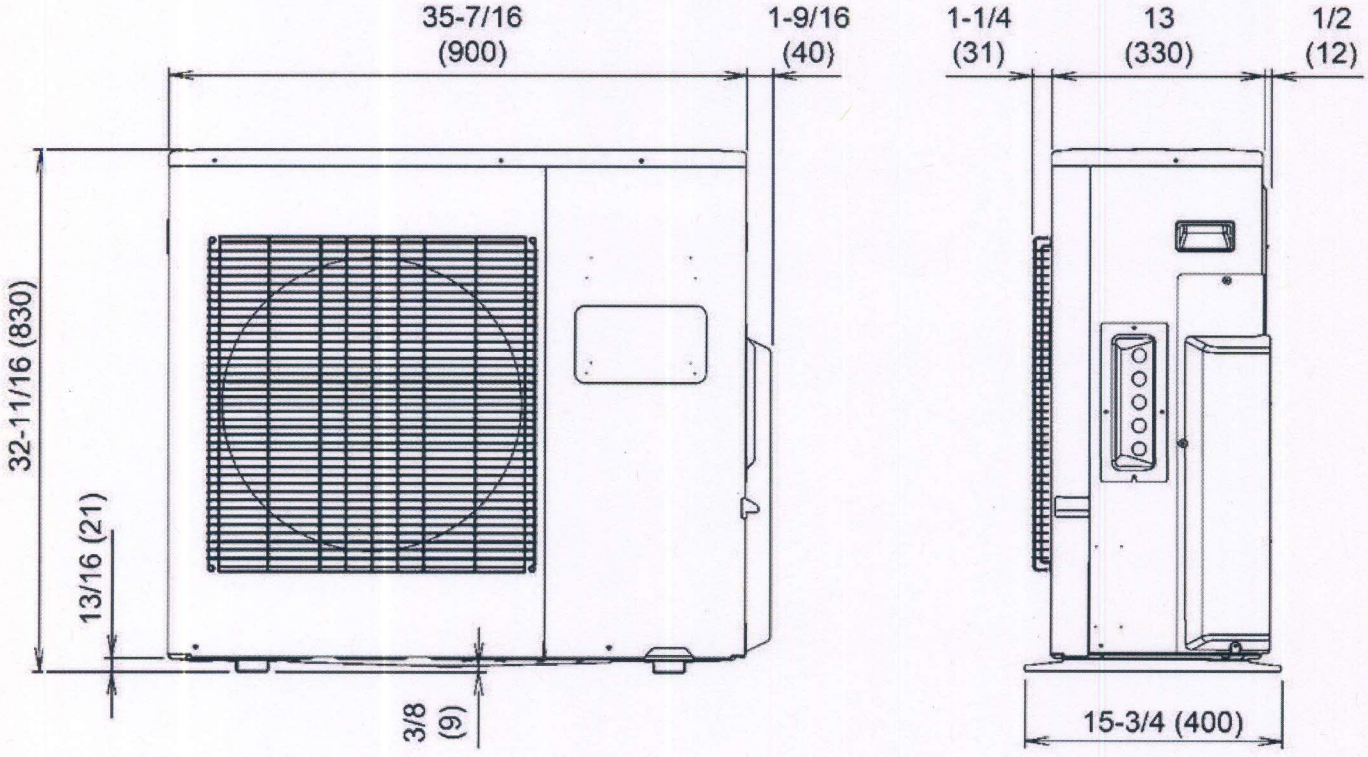

Front view

Side view

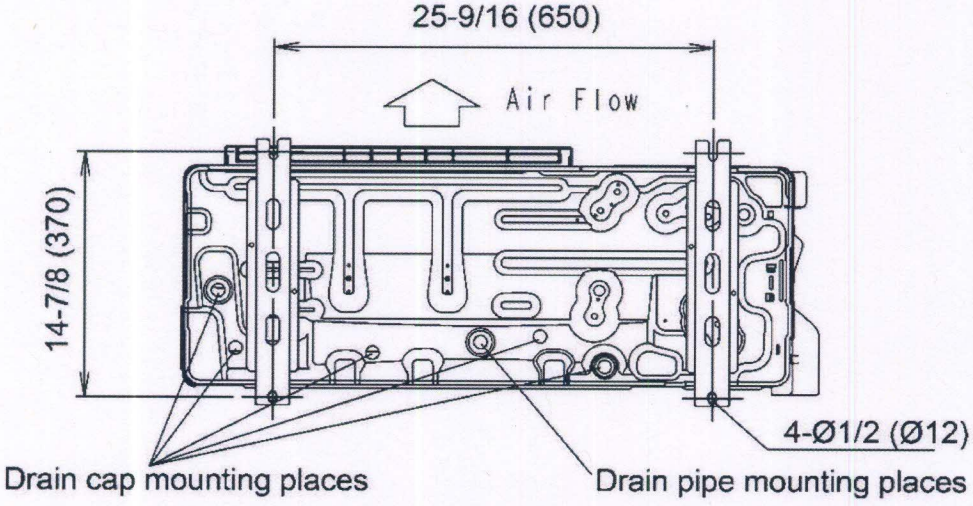

Bottom view

FUJITSU

Fujitsu General America, Inc.
353 Route 46 West
Fairfield, NJ 07004
Toll Free: 1-888-888-3424
Fax: (973) 836-0447
www.fujitsugeneral.com

The Fujitsu logo is a registered trademark of Fujitsu Limited.
The Halcyon logo and name is a trademark of Fujitsu General America, Inc. Copyright 2014 Fujitsu General America, Inc. Fujitsu's products are subject to continuous improvements. Fujitsu reserves the right to modify product design, specifications and information in this brochure without notice and without incurring any obligations.