Inspections Division
Date: 04/11/14

S2 Submittal

FUJITSU

AOU9RLS2, ASU9RLS2
Inverter Driven Heat Pump

Job Name: Carla Thacker
Location: 71 Brackett Avenue, Peaks Island
Engineer: n/a 04108
Submitted to: City of Portland
Submitted by: Maggie Energy
Reference: n/a

Approval:
Date:
Construction:
Unit #:
Drawing #:

Outdoor Unit Power		208-230/VAC-1Ph-60Hz
Available Voltage Range		187-253VAC
Fuse Size, Max.		20A
MCA		10.5A
Compressor		Inverter Driven Variable Speed DC Rotary
No. used		1
Output		850W
Lubrican Oil		POE (RB68)
Fan type		Propeller
Motor Output		115W
Airflow Rate	Cooling/Heating (High)	1082 / 1840CFM
Refrigerant		410A
Outdoor Unit		2lbs 10oz
Control		Electronic Expansion Valve
O.D. Discharge	(in)	1/4"(Flare)
O.D Suction	(in)	3/8"(Flare)
Dimensions		H x W x D
Uncrated	(in)	24-1/2 x 31-3/32 x 11-11/32
	(mm)	(620 x 790 x 290)
Crated	(in)	28-1/16 x 37-7/32 x 15-9/16
	(mm)	(713 x 945 x 395)
Weight		Outdoor
Net		84lbs (38kg)
Gross Shipping		93lbs (42kg)
Cooling		
Rated Capacity		9,000BTU/h
Min-Max Capacity		3,100~12,000BTU/h
Rated Power Input		2.64kw
Max Power Input		3.60kw
SEER		27.2
Outdoor Sound Rating		48dB
Heating		
Rated Capacity		12,000BTU/h
Min-Max Capacity		3,100~22,000BTU/h
Rated Power Input		3.52kw
Max. Power Input		6.45kw
HSPF		12.5
Outdoor Sound Rating		49dB
Piping Lengths		
Max. Piping Length (Total)		66ft
Max. Pipe Height Difference		49ft
Connection method		(Flared)
Operating Range		
Cooling		14°F~115°F DB
Heating		-5°F~75°F DB

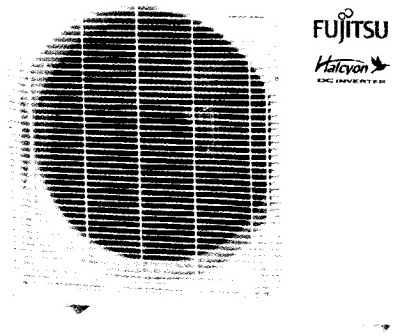

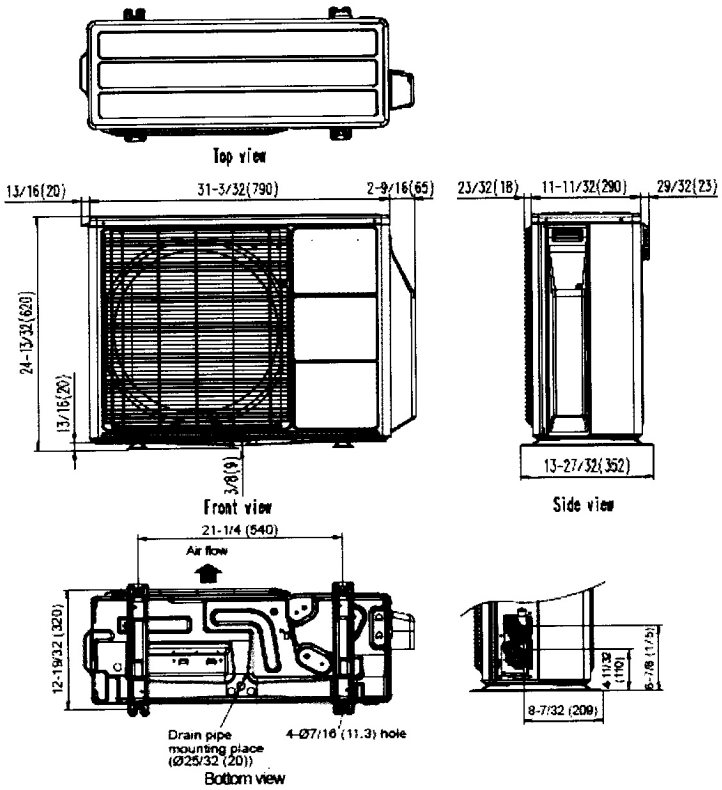

Fujitsu General America, Inc.
Fairfield, NJ 07004
Toll Free: 1-888-888-3424
Fax: (973) 836-0447
www.fujitsugeneral.com

Fujitsu products are subject to continuous improvements. Fujitsu reserves the right to modify product design, specifications and information in this data sheet without notice and without incuring any obligations.

Note: Specifications are based on the following conditions.
Power source of specifications : 230V
Cooling: Indoor temperature of 80°F(26.67°C)DB / 67°F(19.44°C)WB, and outdoor temperature of 95°F(35°C)DB/75°F(23.89°C)WB.
Heating: Indoor temperature of 70°F(21.11°C)DB / 60°F(15.56°C)WB, and outdoor temperature of 47°F(8.33°C)DB/43°F(6.11°C)WB.
Pipe length : 24ft. 7in.(7.5m),Height difference : 0 ft.(0m) [Outdoor unit - Indoor unit]

7 Year Compressor 5 Year Parts WARRANTY

Inspections Division
Date: 04/11/14

FUJITSU

Unit Power		208-230/VAC-1Ph-60Hz
Available Voltage Range		187-253VAC
Fan type		Cross flow
Motor Output		29W
MCA		0.4A
Sound Pressure Level		
Cooling	Lo-Hi	21-43dB
Heating	Lo-Hi	21-43dB
Airflow rate		
Cooling	Lo-Hi	194-500dB
Heating	Lo-Hi	194-500dB
Dimensions		H x W x D
Uncrated	(in)	11-3/32 x 34-1/4 x 7-9/32
	(mm)	(282 x 870 x 185)
Crated	(in)	9-23/32 x 36-7/32 x 14-11/16
	(mm)	(247 x 920 x 373)
Weight		Indoor
Net		21lbs (9.5kg)
Gross Shipping		27lbs (12kg)

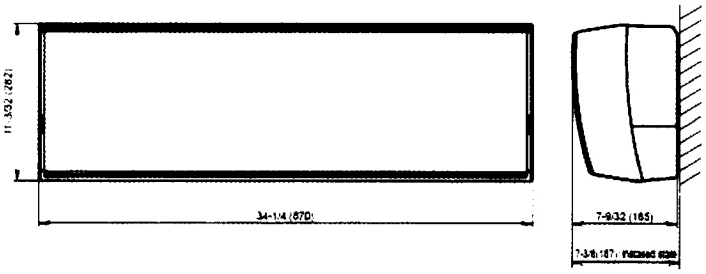

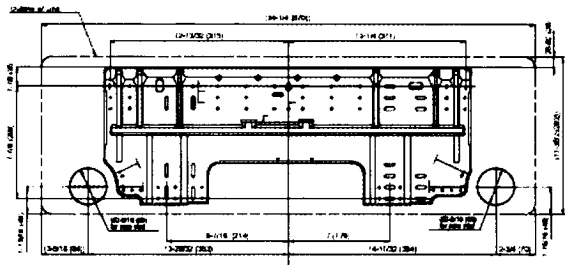

Fujitsu General America, Inc.
Fairfield, NJ 07004
Toll Free: 1-888-888-3424
Fax: (973) 836-0447
www.fujitsugeneral.com

Fujitsu products are subject to continuous improvements. Fujitsu reserves the right to modify product design, specifications and information in this data sheet without notice and without incuring any obligations.

7 Year Compressor 5 Year Parts Warranty