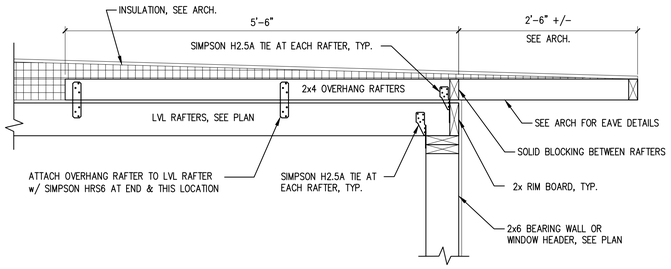

1 SECTION

1" = 1'-0"

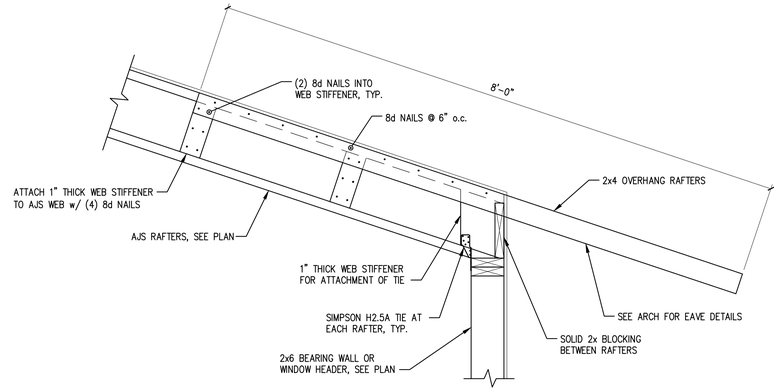

2 SECTION

1" = 1'-0"

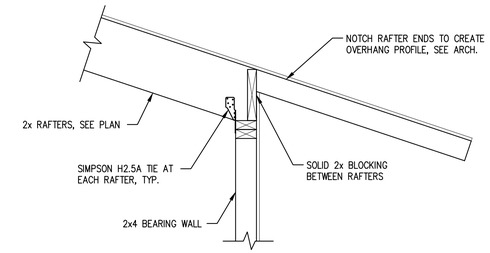

3 SECTION

1" = 1'-0"

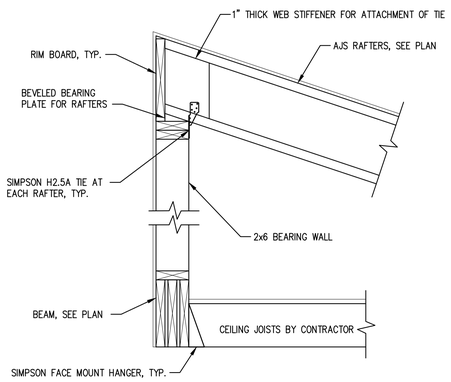

4 SECTION

1" = 1'-0"

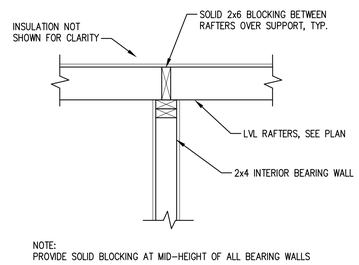

NOTE:
PROVIDE SOLID BLOCKING AT MID-HEIGHT OF ALL BEARING WALLS

5 SECTION

1" = 1'-0"

PRINTED: Sep 29, 2015

CASCO BAY ENGINEERING
424 Fore Street
Portland, ME 04101
Phone 207.842.2800
Fax 207.842.2828
www.cascobayengineering.com

CLIENT:
KAPLAN THOMPSON ARCHITECTS
424 FORE STREET
PORTLAND, ME 04101

STATE OF MAINE
ANTHONY DUMAIS
No. 12851
LICENSED
PROFESSIONAL ENGINEER

LAPIERRE ADDITION
56 WEYMOUTH WAY
GREAT DIAMOND ISLAND, MAINE

RESIDENTIAL ADDITION

ISSUED

No.	DESCRIPTION	DR. BY	CKD. BY	DATE
0	ISSUED FOR PERMIT	TD	TD	10-1-15

SHEET TITLE:

FRAMING DETAILS

DESIGNED:	TD
DRAWN:	TD
DATE:	8-11-15
PROJECT NUMBER:	15-132

S3.1