GENERAL NOTES

1. DETAILS SHOWN ON THESE DRAWINGS ARE TYPICAL; SIMILAR DETAILS APPLY TO SIMILAR CONDITIONS UNLESS NOTED OTHERWISE.
2. BRACE BUILDING UNTIL STRUCTURAL ELEMENTS NECESSARY FOR STABILITY HAVE BEEN INSTALLED. THESE ELEMENTS INCLUDE: ROOF DECK, FLOOR DECK, BRACING MEMBERS, MOMENT CONNECTIONS, SHEAR WALLS, ETC. IT IS THE CONTRACTOR'S RESPONSIBILITY TO DETERMINE ERECTION PROCEDURES AND SEQUENCING TO ENSURE THE SAFETY OF THE BUILDING AND IT'S COMPONENTS DURING ERECTION.
3. CONTRACTOR SHALL NOTIFY THE ENGINEER IN WRITING OF ANY PROPOSED CHANGES, DEVIATIONS OR SUBSTITUTIONS FROM DIMENSIONS, MATERIALS OR EQUIPMENT SHOWN ON THESE DRAWINGS AND MAKE ONLY THOSE CHANGES ACCEPTED BY THE ENGINEER.
4. THE CONTRACTOR SHALL BE RESPONSIBLE FOR THE COORDINATION BETWEEN THE STRUCTURAL DRAWINGS AND THE DRAWINGS OF OTHER DISCIPLINES TO INCLUDE THE LOCATIONS AND DIMENSIONS OF OPENINGS, CHASES, INSERTS, SLEEVES, DEPRESSIONS AND OTHER DETAILS NOT SHOWN ON THE STRUCTURAL DRAWINGS.
5. THESE DRAWINGS DO NOT INCLUDE NECESSARY COMPONENTS FOR CONSTRUCTION SAFETY. THE CONTRACTOR SHALL BE SOLELY RESPONSIBLE FOR CONSTRUCTION SAFETY.

FOUNDATION RELATED EARTHWORK

GENERAL:

1. THESE NOTES COVER EXCAVATING, BACKFILLING, AND COMPACTING WITHIN BUILDING FOOTPRINT AND TO FIVE FEET AROUND BUILDING PERIMETER.

EXCAVATION:

1. EXCAVATE SUBSOIL REQUIRED FOR BUILDING FOUNDATIONS. HAND TRIM EXCAVATIONS. REMOVE LOOSE MATERIAL.
2. COMPACT DISTURBED LOAD BEARING SOIL IN DIRECT CONTACT WITH FOOTINGS TO ORIGINAL BEARING CAPACITY.
3. PLACE A MINIMUM OF 6" CRUSHED STONE BENEATH FOOTINGS IF STANDING WATER OR CLAY SOILS ARE ENCOUNTERED IN EXCAVATIONS.
4. CORRECT UNAUTHORIZED EXCAVATION AT NO COST TO OWNER.
5. FILL OVER-EXCAVATED AREAS UNDER STRUCTURE BEARING SURFACES WITH SUITABLE WELL-DRAINED MATERIAL, APPROVED BY ENGINEER, IN 6" LIFTS. COMPACT TO 98% STANDARD PROCTOR.

BACKFILL AND COMPACTION

1. USE UNFROZEN AND UNSATURATED MATERIALS.
2. BACKFILL SYSTEMATICALLY, AS EARLY AS POSSIBLE, TO ALLOW MAXIMUM TIME FOR NATURAL SETTLEMENT. DO NOT BACKFILL OVER POROUS, WET, FROZEN, OR SPONGY SUBGRADE SURFACES.
3. PLACE FILL MATERIAL IN EQUAL CONTINUOUS LAYERS NOT EXCEEDING 8 INCHES OF COMPACTED DEPTH FOR HAND HELD COMPACTION EQUIPMENT AND A MAXIMUM OF 12 INCHES COMPACTED DEPTH FOR VIBRATORY ROLLERS. COMPACT IN ACCORDANCE WITH BACKFILL REQUIREMENTS AT END OF THIS SECTION.
4. EMPLOY PLACEMENT METHOD SO NOT TO DISTURB OR DAMAGE FOUNDATIONS OR FOUNDATION PERIMETER DRAINAGE.
5. MAINTAIN OPTIMUM MOISTURE CONTENT OF BACKFILL MATERIALS TO ATTAIN REQUIRED COMPACTION DENSITY.
6. BACKFILL AGAINST SUPPORTED FOUNDATION WALLS.
7. BACKFILL SIMULTANEOUSLY ON EACH SIDE OF FOUNDATION WALLS NOT DESIGNED FOR RETAINAGE OF SOIL ON ONE SIDE

MATERIALS

A. STRUCTURAL FILL

SIEVE DESIGNATION	% PASSING BY WEIGHT
4 INCH	100
3 INCH	90–100
1/4 INCH	25–90
NO. 40	0–30
NO. 200	0–5

B. FINE GRANULAR FILL

SIEVE DESIGNATION	% PASSING BY WEIGHT
2 INCH	100
1 ½ INCH	90–100
NO. 4	30–60
NO. 100	0–12
NO. 200	0–6

C. CRUSHED STONE: MeDOT STANDARD SPECIFICATION 703.22 "UNDERDRAIN BACKFILL TYPE C" (CRUSHED)

D. UNDERDRAIN SAND: MeDOT STANDARD SPECIFICATION 703.22 TYPE B "UNDERDRAIN AGGREGATE"

E. SUITABLE NATIVE SOIL: ON SITE SAND OR GRAVEL REASONABLY FREE OF LOAM, SILT, CLAY, OR ORGANIC MATTER.

BACKFILL REQUIREMENTS

A. FILL WITHIN BUILDING ENVELOPE:
   1. MATERIAL: STRUCTURAL FILL
   2. COMPACTION: 95% MODIFIED PROCTOR

B. BACKFILL ALONG EXTERIOR OF BUILDING:
   1. MATERIAL: STRUCTURAL FILL
   2. COMPACTION: 90% MODIFIED PROCTOR.

C. GRAVEL BELOW SLABS:
   1. MATERIAL: STRUCTURAL FILL, FINE GRANULAR FILL
   2. COMPACTION: 95% MODIFIED PROCTOR

CAST-IN-PLACE CONCRETE

GENERAL

1. CODES AND STANDARDS: COMPLY WITH THE PROVISIONS OF THE LATEST EDITIONS OF:
   A. ACI 318 "BUILDING CODE REQUIREMENTS FOR REINFORCED CONCRETE"
   B. ACI 301 "SPECIFICATIONS FOR STRUCTURAL CONCRETE"
   C. ACI 305 "HOT WEATHER CONCRETING"
   D. ACI 306 "STANDARD SPECIFICATION FOR COLD WEATHER CONCRETING"
   E. ACI 308 "STANDARD PRACTICE FOR CURING CONCRETE"

CONCRETE REINFORCING

1. REINFORCEMENT: ASTM A615/A615M; 60 KSI YIELD STRENGTH, DEFORMED STEEL BARS.
2. WELDED PLAIN WIRE FABRIC: ASTM A185.
3. FIBER REINFORCING: ASTM C1116, TYPE III SYNTHETIC VIRGIN HOMOPOLYMER POLYPROPYLENE
4. CHAIRS, BOLSTERS, BAR SUPPORTS, SPACERS: SIZED AND SHAPED FOR SUPPORT OF REINFORCING; PLASTIC TIPPED OR NON-CORRODING FOR SUPPORTS EXPOSED TO WEATHER. FOREIGN MATERIAL SUCH AS WOOD OR OTHER UNSUITABLE MATERIAL SHALL NOT BE USED.
5. FABRICATE CONCRETE REINFORCEMENT IN ACCORDANCE WITH CRSI MANUAL OF PRACTICE, ACI 301 AND ACI 318.
6. CONCRETE CLEAR COVER FOR REINFORCING, UNLESS NOTED OTHERWISE

A. BOTTOM OF FOOTINGS AND SLABS ON GRADE:	3"
B. SIDES OF FOOTINGS, FOUNDATION WALLS:	2"
C. FACES OF WALLS OTHER THAN THOSE NOTED ABOVE:	3/4"

CONCRETE MATERIALS

1. CEMENT: ASTM C150, NORMAL-TYPE I PORTLAND TYPE.
2. FINE AND COURSE AGGREGATES: ASTM C33
3. WATER: CLEAN AND NOT DETRIMENTAL TO CONCRETE.
4. AIR ENTRAINMENT ADMIXTURE: ASTM C260
5. CONCRETE STRENGTH AT 28 DAYS:

	PSI	SLUMP
A. FOOTINGS, PIERS AND FOUNDATION WALLS:	3000 PSI	4"±1
B. INTERIOR SLABS ON GRADE:	3000 PSI	4"±1
C. EXTERIOR SLABS:	3500 PSI.	4"±1

6. MIX AND DELIVER IN ACCORDANCE WITH ASTM C94.
7. ADD AIR ENTRAINING AGENT TO CONCRETE MIX FOR CONCRETE EXPOSED TO EXTERIOR. PROVIDE AIR ENTRAINMENT OF 5 TO 7% BY VOLUME.
8. NO CHLORIDE OR OTHER UNAUTHORIZED ADMIXTURES SHALL BE USED.

INSERTS, EMBEDDED COMPONENTS, AND OPENINGS

1. PROVIDE FORMED OPENINGS WHERE REQUIRED FOR WORK TO BE EMBEDDED IN AND PASSING THROUGH CONCRETE MEMBERS.
2. COORDINATE WORK OF OTHER SECTIONS IN FORMING AND SETTING OPENINGS, SLOTS, RECESSES, CHASES, SLEEVES, BOLTS, ANCHORS, AND OTHER INSERTS.
3. INSTALL CONCRETE ACCESSORIES STRAIGHT, LEVEL, AND PLUMB.
4. PLACE JOINT FILLER AT PERIMETER OF FLOOR SLAB, PENETRATIONS AND ISOLATION JOINTS.

EXECUTION

1. CONCRETE FORMS SHALL BE CLEAN AND FREE FROM DEBRIS.
2. APPLY FORM RELEASE AGENT TO FORMWORK PRIOR TO PLACING FORM ACCESSORIES AND REINFORCEMENT.
3. COAT INSIDE OF UNTREATED FORMS WITH WATER PRIOR TO USE.
4. DO NOT DAMAGE CONCRETE DURING STRIPPING.
5. OBTAIN APPROVAL PRIOR TO FORMING OPENINGS IN STRUCTURAL MEMBERS NOT INDICATED ON THE DRAWINGS.
6. PROVIDE BRACING TO ENSURE STABLITY OF CONCRETE.
7. DO NOT REMOVE FORMS OR BRACING UNTIL CONCRETE HAS GAINED SUFFICIENT STRENGTH TO CARRY ITS OWN WEIGHT AND ANY IMPOSED LOADS.
8. CLEAN FORMS AS ERECTION PROCEEDS, TO REMOVE FOREIGN MATTER
9. REMOVE FORMWORK PROGRESSIVELY AND IN ACCORDANCE WITH CODE REQUIREMENTS.
10. PLACE REINFORCEMENT, SUPPORTED AND SECURED AGAINST DISPLACEMENT.
11. ENSURE REINFORCING IS CLEAN, FREE OF LOOSE SCALE, DIRT, OR OTHER FOREIGN COATINGS.
12. DO NOT WELD CROSSING REINFORCEMENT BARS FOR ASSEMBLY EXCEPT AS PERMITTED BY ARCHITECT/ENGINEER.
13. SPACE REINFORCEMENT BARS WITH MINIMUM CLEAR SPACING IN ACCORDANCE WITH ACI 318.
14. MAINTAIN CONCRETE COVER AROUND REINFORCEMENT IN ACCORDANCE WITH ACI 318.
15. PREPARE PREVIOUSLY PLACED CONCRETE BY CLEANING WITH STEEL BRUSH AND APPLYING BONDING AGENT.
16. COMPLY WITH ACI CODES AND PLACE CONCRETE CONTINUOUSLY BETWEEN PREDETERMINED EXPANSION, CONTROL AND CONSTRUCTION JOINTS. DO NOT BREAK OR INTERRUPT SUCCESSIVE POURS CREATING COLD JOINTS.
17. PLACE FLOOR SLABS IN SAW CUT PATTERN INDICATED.
18. SCREED SLABS-ON-GRADE LEVEL.

FLOOR FINISHING

1. FINISH CONCRETE FLOOR SURFACES IN ACCORDANCE WITH ACI 301 AND ACI 302.1.
2. UNIFORMLY SPREAD, SCREED, AND FLOAT CONCRETE.
3. WOOD FLOAT SURFACES RECEIVING TILE WITH FULL BED SETTING SYSTEM.
4. STEEL TROWEL SURFACES RECEIVING CARPETING, RESILIENT FLOORING, SEAMLESS FLOORING, THIN SET TILE, OR REMAINING EXPOSED TO VIEW IN FINISHED CONSTRUCTION, U.N.O.
5. BROOM FINISH SLABS AT MEN'S ROOM, WOMEN'S ROOM AND EXTERIOR SHOWERS.
6. MAINTAIN SURFACE FLATNESS WITH A MAXIMUM VARIATION OF 1/4" IN 10 FEET.
7. IN AREAS WITH FLOOR DRAINS, MAINTAIN FLOOR LEVEL AT WALLS AND SLOPE SURFACES UNIFORMLY TO DRAINS.

CURING

1. IMMEDIATELY AFTER PLACEMENT, PROTECT CONCRETE FROM PREMATURE DRYING.
2. MAINTAIN CONCRETE WITH MINIMAL MOISTURE LOSS AT RELATIVELY CONSTANT TEMPERATURE FOR PERIOD NECESSARY FOR HYDRATION OF CEMENT AND HARDENING OF CONCRETE BUT NOT LESS THAN 7 DAYS.

ERECTION TOLERANCES

1. INSTALL REINFORCEMENT WITHIN TOLERANCES REQUIRED BY ACI 318.

RELATED ITEMS

1. FORM RELEASE AGENT: COLORLESS MINERAL OIL NOT CAPABLE OF STAINING CONCRETE OR IMPAIRING NATURAL BONDING CHARACTERISTICS OF COATING INTENDED FOR USE ON CONCRETE.
2. SLAB EDGE JOINT FILLER: ASTM D1751, PREMOLDED ASPHALTIC BOARD, 1/2 INCH THICK.
3. NON-SHRINK GROUT: PREMIXED COMPOUND CONSISTING OF NON-METALLIC AGGREGATE, CEMENT, WATER REDUCING AND PLASTICIZING AGENTS WITH MINIMUM 28 DAY COMPRESSIVE STRENGTH OF 7000 PSI AS MANUFACTURED BY FIVE STAR PRODUCTS, INC. OR APPROVED EQUIVALENT
4. WATER STOPS:
   A. POLYVINYL CHLORIDE (PVC): 6" INCH WIDE, MAXIMUM POSSIBLE LENGTHS, MANUFACTURED BY GREENSTREAK OR ACCEPTED EQUIVALENT.
   B. BENTONITE: VOLCLAY WATERSTOP-RX BY CETCO BUILDING MATERIALS GROUP OR ACCEPTED EQUIVALENT.

WOOD FRAMING AND SHEATHING

GENERAL:

1. UNLESS OTHERWISE SPECIFIED, EACH PIECE OF LUMBER SHALL BEAR THE GRADE MARK, STAMP, OR OTHER IDENTIFYING MARKS INDICATING GRADES OF MATERIALS, AND RULES OR STANDARDS UNDER WHICH PRODUCED. SUCH IDENTIFYING MARKS ON A MATERIAL SHALL BE IN ACCORDANCE WITH THE RULE OR STANDARD UNDER WHICH THE MATERIAL IS PRODUCED, INCLUDING REQUIREMENTS FOR QUALIFICATIONS AND AUTHORITY OF THE INSPECTION ORGANIZATION, USAGE OF AUTHORIZED IDENTIFICATIONS, AND INFORMATION INCLUDED IN THE IDENTIFICATION. THE INSPECTION AGENCY FOR LUMBER SHALL BE APPROVED BY THE BOARD OF REVIEW, AMERICAN LUMBER STANDARDS COMMITTEE, TO GRADE SPECIES USED.
2. PROTECT LUMBER AND OTHER PRODUCTS FROM DAMPNESS BOTH DURING AND AFTER DELIVERY AT THE SITE. PILE PLYWOOD AND LUMBER IN STACKS IN SUCH A MANNER AS TO PROVIDE ADEQUATE AIR CIRCULATION AND TO PREVENT WARPING. LOCATE STACKS IN WELL DRAINED AREAS, SUPPORTED AT LEAST 6 INCHES ABOVE GRADE AND COVER WITH WELL VENTILATED SHEDS HAVING FIRMLY CONSTRUCTED OVERHANGING ROOF AS WELL AS SUFFICIENT END WALL TO PROTECT LUMBER FROM DRIVING RAIN.
3. STORE SEASONED MATERIALS IN DRY PORTIONS OF THE BUILDING.
4. PROTECT SHEET MATERIALS FROM CORNERS BREAKING AND DAMAGING SURFACES WHILE UNLOADING.

LUMBER MATERIALS:

1. NOMINAL SIZES ARE INDICATED EXCEPT AS INDICATED BY DETAILED DIMENSIONS. PROVIDE ACTUAL SIZES AS REQUIRED BY PRODUCT STANDARD 20, DEPARTMENT OF COMMERCE.
2. PROVIDE DRESSED LUMBER UNLESS NOTED OTHERWISE.
3. LUMBER GRADES:
   A. 2X4 AND 2X6 BEARING WALLS, INTERIOR AND EXTERIOR LOCATIONS:
      i. SPECIES AND GRADE: SPRUCE-PINE-FIR (SOUTH) NO. 2 OR BETTER AS GRADED BY NELMA; MEETING THE FOLLOWING MINIMUM ALLOWABLE STRESS CRITERIA:
         Fb = 775 PSI
         Fv = 135 PSI
         Fcǁ = 1000 PSI
         Fc⊥ = 335 PSI
         E = 1,100,000 PSI
      ii. MAXIMUM MOISTURE CONTENT SHALL NOT EXCEED 19%
   B. STRUCTURAL FLOOR AND ROOF FRAMING
      i. SPECIES AND GRADE: SPRUCE-PINE-FIR NO. 1/NO. 2 AS GRADED BY NLGA MEETING THE FOLLOWING MINIMUM ALLOWABLE STRESS CRITERIA:
         Fb = 875 PSI
         Fv = 135 PSI
         Fcǁ = 1150 PSI
         Fc⊥ = 425 PSI
         E = 1,400,000 PSI
      ii. MAXIMUM MOISTURE CONTENT SHALL NOT EXCEED 19%
   C. PRESSURE TREATED LUMBER
      i. SPECIES AND GRADE: SOUTHERN PINE NO. 2 AS GRADED BY SPIB
   D. MISCELLANEOUS LUMBER- PROVIDE WOOD FOR SUPPORT OR ATTACHMENT OF THE WORK INCLUDING NON-BEARING PARTITIONS, CANT STRIPS, BUCKS, NAILERS, BLOCKING, FURRING, GROUNDS, STRIPPING AND SIMILAR MEMBERS.
      i. SPECIES AND GRADE: SPRUCE-PINE-FIR (SOUTH) STUD GRADE AS GRADED BY NELMA
   E. LAMINATED VENEER LUMBER (LVL) - LAMINATED DOUGLAS FIR OR SOUTHERN PINE (MICROLLAM BY TRUS JOIST OR APPROVED EQUIVALENT) MEETING THE FOLLOWING MINIMUM REQUIREMENTS:
      i. FB (BENDING STRESS) = 2,600 PSI
      ii. FV (HORIZONTAL SHEAR STRESS) = 285 PSI
      iii. FC (COMPRESSION PERPENDICULAR TO GRAIN) = 750 PSI
      iv. E (MODULUS OF ELASTICITY) = 1,900,000 PSI
   F. PARALLEL STRAND LUMBER (PSL)
      i. 2.0 PARALLAM PSL BY TRUS JOIST FOR BEAMS
      ii. 1.8E PARALLAM PSL BY TRUS JOIST FOR POST/COLUMNS
   G. LAMINATED STRAND LUMBER (LSL) - 1.5E TIMBERSTRAND LSL BY TRUS JOIST
   H. I-JOIST - TJI BY TRUS JOIST. SERIES AS INDICATED ON DRAWINGS

SHEATHING MATERIALS:

1. ROOF SHEATHING: 5/8" APA RATED SHEATHING , 40/20 SPAN RATING; EXPOSURE DURABILITY 1
2. WALL SHEATHING: 1/2" APA RATED SHEATHING , 32/16 SPAN RATING; EXPOSURE DURABILITY 1
3. PLYWOOD FLOOR SHEATHING: APA RATED SHEATHING, 24" oc SPAN, THICKNESS AS INDICATED; EXPOSURE DURABILITY 1
4. UNDERLAYMENT: APA RATED SHEATHING, TONGUE AND GROOVE, SPAN RATING SUITABLE FOR USE, THICKNESS AS INDICATED; EXPOSURE DURABILITY; SANDED.

ACCESSORIES:

1. FASTENERS: GALVANIZED STEEL FOR EXTERIOR, HIGH HUMIDITY, AND TREATED WOOD LOCATIONS, PLAIN FINISH ELSEWHERE. FURNISH ITEMS OF ROUGH HARDWARE, METAL CONNECTORS, BOLTS, ETC., REQUIRED TO COMPLETE THE WORK. BOLTS, NUTS AND WASHERS SHALL BE HOT DIPPED GALVANIZED STEEL.
2. STRUCTURAL FRAMING CONNECTORS: JOIST HANGERS: GALVANIZED STEEL, SIZED TO SUIT FRAMING CONDITIONS. MANUFACTURED BY SIMPSON STRONG TIE OR APPROVED EQUIVALENT.
3. SILL GASKET ON TOP OF FOUNDATION WALL: PLATE WIDTH, 1/4", THICK CLOSED CELL FOAM FROM CONTINUOUS ROLLS.

WOOD TREATMENT:

1. WOOD PRESERVATIVE (PRESSURE TREATMENT): AWPA U1
   A. USE CATEGORY UC2 FOR INTERIOR CONSTRUCTION NOT IN CONTACT WITH THE GROUND.
   B. USE CATEGORY UC3b FOR EXTERIOR CONSTRUCTION NOT IN CONTACT WITH THE GROUND.
   C. USE CATEGORY UC4a FOR ITEMS IN CONTACT WITH THE GROUND.
2. ALL WOOD TO BE USED IN PERMANENT CONSTRUCTION THAT IS IN CONTACT WITH CONCRETE, MASONRY, WATER, GROUND, LEFT EXPOSED TO THE WEATHER, AND AS INDICATED ON THE DRAWINGS SHALL BE PRESSURE TREATED AGAINST DECAY .PRESERVATIVES SHALL BE COMPATIBLE WITH MATERIALS WITH WHICH THEY WILL BE USED.

EXECUTION:

1. ALL FASTENING SHALL COMPLY WITH THE NATIONAL FOREST AND PAPER ASSOCIATION NATIONAL DESIGN SPECIFICATION OR THE "RECOMMENDED FASTENING SCHEDULE" IN THE 2009 INTERNATIONAL BUILDING CODE UNLESS NOTED OTHERWISE ON THE CONTRACT DRAWINGS.
2. PLACE MEMBERS LEVEL AND PLUMB, IN THE CORRECT POSITION. PLACE HORIZONTAL MEMBERS CROWN SIDE UP.
3. CONSTRUCT FRAMING MEMBERS FULL LENGTH, WITHOUT SPLICES.
4. PLACE SILL GASKET DIRECTLY ON FOUNDATION.
5. FRAME DOUBLE JOIST HEADERS AT CEILING OPENINGS FRAME RIGIDLY INTO JOISTS.
5. DOUBLE MEMBERS OVER OPENINGS OVER 24 INCHES WIDE. SPACE SHORT STUDS ABOVE AND BELOW OPENING MATCHING STUD SPACING.
7. CURB ROOF OPENINGS EXCEPT WHERE CURBS ARE PROVIDED. CONSTRUCT CURB MEMBERS OF SINGLE PIECES FOR EACH SIDE. FORM CORNERS BY ALTERNATING LAPPING SIDE MEMBERS.
8. POST AND COLUMNS FROM HEADERS AND BEAMS SHALL BEAR CONTINUOUSLY TO THE CONCRETE FOUNDATIONS, INCLUDING BLOCKING IN INTERSTITIAL FLOOR AND ROOF SPACES. BLOCKING SHALL BE OF THE SIZE AND SHAPE TO CARRY THE REQUIRED LOADING.
9. ALL BOTTOM BEARING PLATES, FOR STUD WALLS OR BEAM BEARING SHALL BE ANCHORED TO THE FOUNDATION WITH 1/2" DIAMETER ANCHOR BOLTS SPACED AT 4'-0" OC, UNLESS NOTED OTHERWISE. ONE ANCHOR SHALL BE LOCATED WITHIN 8" OF ALL BUILDING CORNERS (BOTH SIDES), ALL WALL TERMINATIONS AND EACH SIDE OF JOINTS IN SILL PLATES. A MINIMUM OF TWO (2) ANCHORS SHALL BE INSTALLED PER EA. PIECE FOUNDATION PLATE.
10. ALL BEARING WALLS SHALL BE BLOCKED AT 4'-0" ON CENTER VERTICALLY.
11. INSTALL ROOF SHEATHING WITH LONGER EDGE PERPENDICULAR TO FLOOR FRAMING WITH END JOINTS STAGGERED. SECURE SHEET EDGES OVER FIRM BEARING.
12. INSTALL SHEATHING IN COMBINATION SIMPLE SPAN AND TWO SPAN CONTINUOUS.
13. SECURE WALL SHEATHING PERPENDICULAR TO WALL STUDS, WITH ENDS STAGGERED, OVER FIRM BEARING.
14. PLACE BUILDING PAPER OVER WALL SHEATHING, WEATHER LAP JOINTS AND END LAPS, STAPLE IN PLACE.
15. USE SHEATHING CLIPS BETWEEN SHEETS BETWEEN ROOF FRAMING MEMBERS. INSTALL SOLID EDGE BLOCKING BETWEEN SHEETS AS INDICATED ON PLANS.
15. PROVIDE BLOCKING AND FRAMING AS REQUIRED TO SUPPORT FACING MATERIALS, FIXTURES, SPECIALTY ITEMS AND TRIM.
16. ALL WOOD IN CONTACT WITH CONCRETE SHALL BE PRESSURE TREATED.

TOLERANCES:

1. FRAMING MEMBERS: 1/4" INCH FROM TRUE POSITION MAXIMUM.

BASIS OF DESIGN

BUILDING CODE	2009 INTERNATIONAL BUILD 2009 INTERNATIONAL RESID
DESIGN LOADS:	
ROOF DEAD LOAD	15 PSF
ROOF LIVE LOAD	SNOW LOAD GOVERNS
FLOOR LIVE LOAD	40 PSF 30 PSF AT SLEEPING ROO
ROOF SNOW LOAD	
GROUND SNOW LOAD, Pg	50 PSF
SNOW EXPOSURE FACTOR, Ce	1.0
SNOW LOAD IMPORTANCE FACTOR, I	1.0
SNOW LOAD THERMAL FACTOR, Ct	1.1
	1.2 AT COVERED PORCH
WIND LOAD:	
WIND SPEED	100 MPH
EXPOSURE	C
MISCELLANEOUS	
ALLOWABLE SOIL BEARING CAPACITY	3000 PSF (TO BE VERIFIED IN FIELD)

ABBREVIATIONS

(NOTE: NOT ALL ABBREVIATIONS ARE USED)

A.R.	ANCHOR ROD	LLV	LONG LEG VERTICAL
AFF	ABOVE FINISHED FLOOR	LVL	LAMINATED VENEER LUMBER
AL	ALUMINUM	MAX	MAXIMUM
ARCH	ARCHITECT / ARCHITECTURAL	MIN	MINIMUM
B.O.	BOTTOM OF	NS	NEAR SIDE
BRG	BEARING	NTS	NOT TO SCALE
℄	CENTERLINE	oc	ON CENTER
C.J.	CONTROL / CONSTRUCTION JOINT	P#	PIER MARK
CMU	CONCRETE MASONRY UNIT	PL or ℙ	PLATE
CONT	CONTINUOUS	PSF	POUNDS PER SQUARE FOOT
DIA or ø	DIAMETER	PSI	POUNDS PER SQUARE INCH
DWG	DRAWING	PT	PRESSURE TREATED
EF	EACH FACE	REINF.	REINFORCED / REINFORCING
ELEV	ELEVATION	SIM.	SIMILAR
EMBED	EMBEDMENT	STD.	STANDARD
ES	EACH SIDE	T/CONC	TOP OF CONCRETE
EW	EACH WAY	T/PIER	TOP OF PIER ELEVATION
EQ	EQUAL	T/SLAB	TOP OF SLAB ELEVATION
EX	EXISTING	T/STL	TOP OF STEEL ELEVATION
F#	FOOTING MARK	TOSH	TOP OF SHELF ELEVATION
FS	FAR SIDE	TOW	TOP OF WALL ELEVATION
FTG	FOOTING	TYP.	TYPICAL
GALV	GALVANIZED	UNO	UNLESS NOTED OTHERWISE
LLH	LONG LEG HORIZONTAL	VIF	VERIFY IN FIELD
		W.P.	WORKING POINT

DRAWING LEGEND

N — NORTH ARROW	CONCRETE
ELEVATION TARGET	COMPACTED STRUCTURAL FILL
# / S- — SECTION NUMBER / DRAWING NUMBER	FINE GRANULAR FILL
1/8"/FT — SLOPE DIRECTION AND MAGNITUDE	3/4" CRUSHED STONE
12 / 6 — ROOF PITCH	UNDISTURBED SUBGRADE
	LEDGE / ROCK

CITY OF PORTLAND, MAINE — RESURGAM

Reviewed for Code Compliance
Inspections Division
Approved with Conditions

Date: 12/11/17

Revisions:		
No:	Date:	Description:

M2 STRUCTURAL ENGINEERING, P.C.
23 Thornbury Way
Windham, ME 04062
(207) 892-0983
info@m2se.com

Client: AMY FARRELL

Sheet Title: GENERAL NOTES

Project Name: FARRELL RESIDENCE
GREAT DIAMOND ISLAND,
PORTLAND, MAINE

Project No:	17079
Designed By:	MJM
Drawn By:	MJM
Checked By:	MJM
Scale:	NONE
Date:	09/25/2017

S1

This drawing is an instrument of professional service, and shall not be used in whole or in part, for any project other than for which it was created without the express, written consent of M² Structural Engineering P.C. Any unauthorized use, reuse, modification or alteration, including automated conversion of this document shall be at the user's sole risk without liability or legal exposure to M² Structural Engineering, P.C.

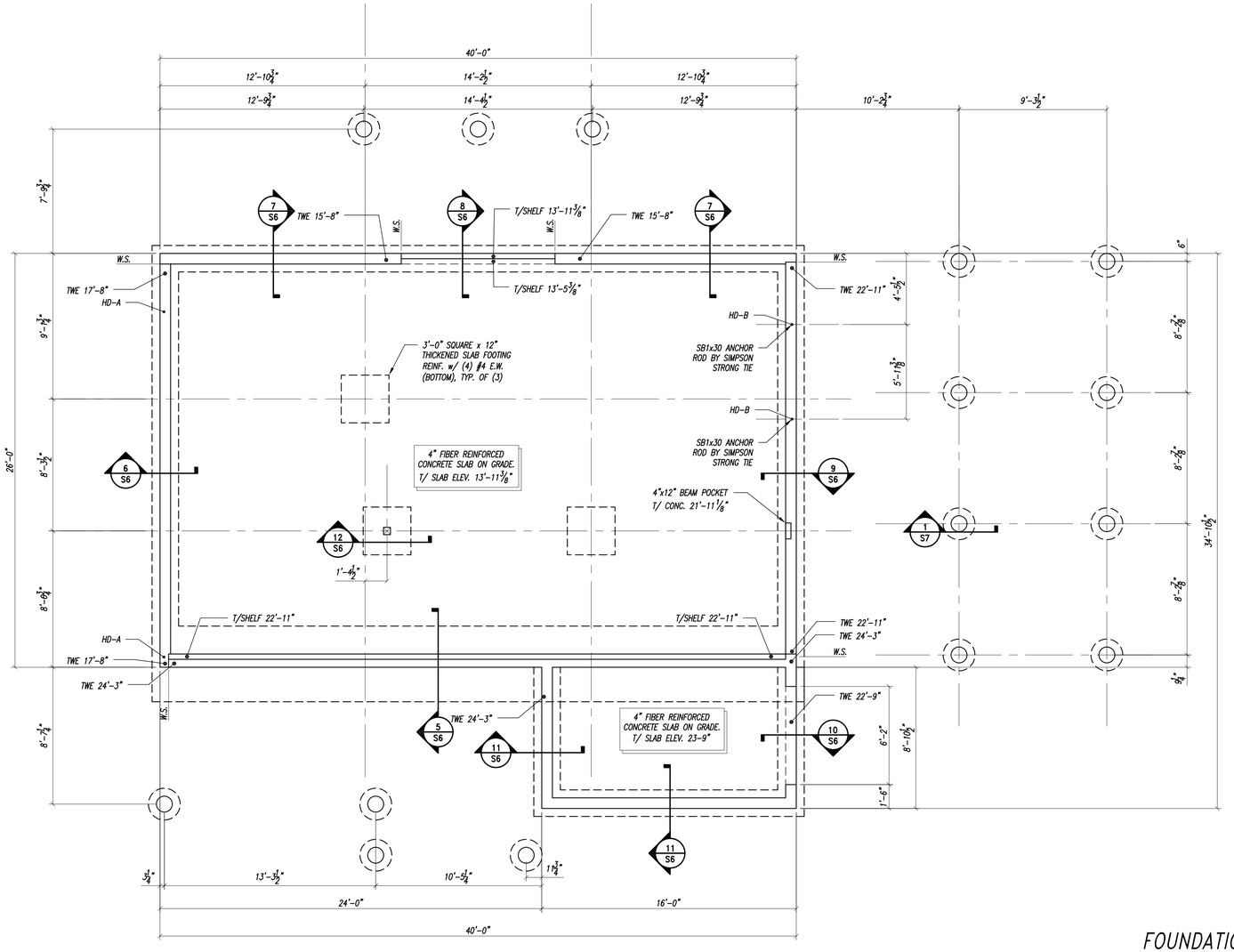

FOUNDATION PLAN

1/4" = 1'-0"

PLAN NOTES:

1. SEE PLAN FOR TOP OF SLAB ELEVATION.
2. TWE INDICATES TOP OF WALL ELEVATION. SEE PLAN
3. CONTRACTOR SHALL COORDINATE TOP OF FOOTING ELEVATIONS WITH SITE CONDITIONS. FOOTINGS SHALL BEAR A MINIMUM OF 4'-6" BELOW GRADE FOR FROST PROTECTION, U.N.O. WHERE FOOTINGS ARE FOUNDED ON LEDGE, PROVIDE A MINIMUM OF 2'-0" OF COVER.
4. ALL FOOTINGS SHALL BE CENTERED ON CENTERLINE OF WALL, PIER OR COLUMN, U.N.O.
5. STEP FOOTINGS BELOW PIPING AND CONDUIT AS REQUIRED TO PENETRATE THROUGH WALL NOT FOOTING.
6. SEE DETAIL 2/S6 FOR TYPICAL WALL REINFORCING AT CORNERS AND INTERSECTIONS.
7. SEE 3/S6 FOR TYPICAL FOUNDATION WALL CONSTRUCTION/CONTRACTION JOINT DETAILS.
8. PROVIDE SLEEVES THROUGH WALLS FOR PIPING AND CONDUIT. COORDINATE SLEEVE SIZES, QUANTITIES AND LOCATIONS WITH MECHANICAL, ELECTRICAL, AND PLUMBING DRAWINGS. SEE DETAIL 4/S6 FOR TYPICAL WALL PENETRATION DETAIL.
9. W.S INDICATES WALL STEP. COORDINATION LOCATIONS WITH ARCHITECTURAL DRAWINGS.
7. HD-x INDICATES SHEAR WALL HOLDOWN. SEE SHEAR WALL SCHEDULE ON SHEET S7.

This drawing is an instrument of professional service, and shall not be used, in whole or in part, for any project other than for which it was created without the express, written consent of M² Structural Engineering, P.C. Any unauthorized use, reuse, modification or alteration, including automated conversion of this document shall be at the user's sole risk without liability or legal exposure to M² Structural Engineering, P.C.

RESURGAM. CITY OF PORTLAND, MAINE
Reviewed for Code Compliance
Inspections Division
Approved with Conditions
Date: 12/11/17

Revisions:		
No:	Date:	Description:

M² STRUCTURAL ENGINEERING, P.C.
23 Thornbury Way
Windham, ME 04062
(207) 892-0983
info@m2se.com

Client: AMY FARRELL

Sheet Title: FOUNDATION PLAN

Project Name: FARRELL RESIDENCE GREAT DIAMOND ISLAND, PORTLAND, MAINE

Project No:	17079
Designed By:	MJM
Drawn By:	MJM
Checked By:	MJM
Scale:	AS NOTED
Date:	09/25/2017

S2

HEADER SCHEDULE

PLAN MARK	HEADER SIZE	JACK STUDS EA. END (U.N.O)	KING STU EA. END (U
H1	(2) 2x6	(1) 2x6	(1) 2x
H2	(2) 2x8	(2) 2x6	(2) 2x
H3	(3) 2x8	(2) 2x6	(2) 2x
H4	(3) 2x10	(2) 2x6	(2) 2xo
H5	(2) $1\frac{3}{4}$"x$9\frac{1}{2}$" LVL	(2) 2x6	(2) 2x6

NOTES:
1. SEE DETAIL 2/S8 FOR TYPICAL HEADER DETAIL

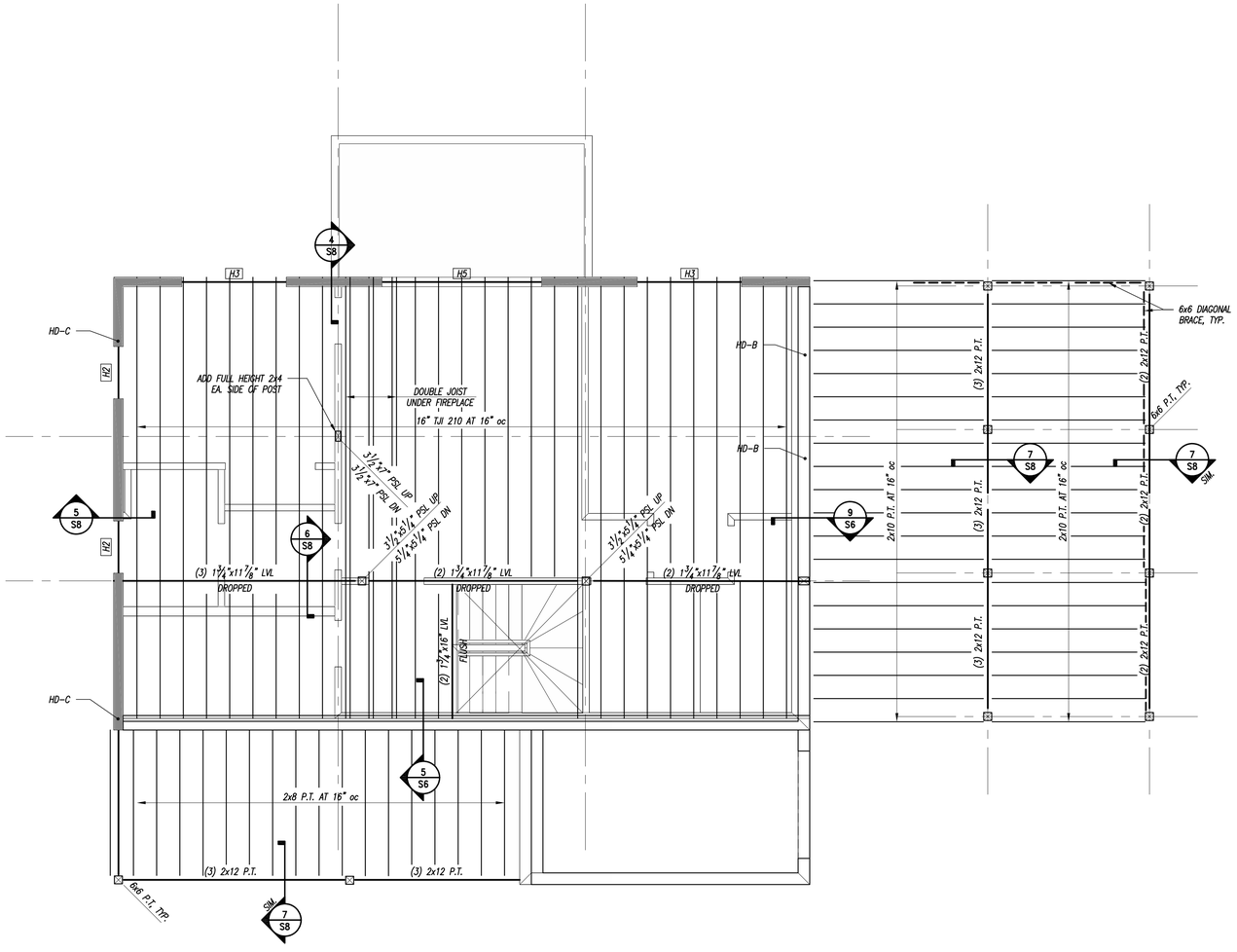

FIRST FLOOR FRAMING PLAN

1/4" = 1'-0"

PLAN NOTES:
1. TOP OF FINISHED FLOOR ELEVATION = 24'-6" (VERIFY w/ ARCH.)
2. TOP OF SUBFLOOR ELEVATION = 24'-5¼"
3. ▬ INDICATES WOOD STUD BEARING WALLS. WALL STUDS SHALL BE SPACED AT 16" o.c. MAX. REFER TO ARCH. FOR WALL TYPES. EXTERIOR WALLS SHALL BE 2x6's U.N.O.
4. ALL EXTERIOR WALLS SHALL BE CONSIDERED SHEAR WALLS. WALLS SHALL BE SHEATHED WITH 15/32" APA RATED SHEATHING NAILED w/ 0.131"ø x 2½" LONG NAILS AT 4" oc AT ALL PANELS EDGES AND AT 12" oc AT INTERMEDIATE SUPPORTS. HORIZONTAL BLOCKING IS REQURIED AT ALL PANEL EDGES, U.N.O.
5. HD-x INDICATES SHEAR WALL HOLDOWN. SEE SHEAR WALL SCHEDULE ON SHEET S7.

This drawing is an instrument of professional service, and shall not be used, in whole or in part, for any project other than for which it was created without the express, written consent of M² Structural Engineering, P.C. Any unauthorized use, reuse, modification or alteration, including automated conversion of this document shall be at the user's sole risk without liability or legal exposure to M² Structural Engineering, P.C.

CITY OF PORTLAND, MAINE — RESURGAM

Reviewed for Code Compliance
Inspections Division
Approved with Conditions

Date: 12/11/17

Revisions:		
No:	Date:	Description:

M² STRUCTURAL ENGINEERING, P.C.
23 Thornbury Way
Windham, ME 04062
(207) 892-0983
info@m2se.com

Client: AMY FARRELL

Sheet Title: FIRST FLOOR FRAMING PLAN

Project Name: FARRELL RESIDENCE
GREAT DIAMOND ISLAND,
PORTLAND, MAINE

Project No:	17079
Designed By:	MJM
Drawn By:	MJM
Checked By:	MJM
Scale:	AS NOTED
Date:	09/25/2017

S3

This drawing is an instrument of professional service, and shall not be used, in whole or in part, for any project other than for which it was created without the express, written consent of M² Structural Engineering, P.C. Any unauthorized use, reuse, modification or alteration, including automated conversion of this document shall be at the user's sole risk without liability or legal exposure to M² Structural Engineering, P.C.

HEADER SCHEDULE

PLAN MARK	HEADER SIZE	JACK STUDS EA. END (U.N.O)	KING STU EA. END (U
H1	(2) 2x6	(1) 2x6	(1) 2x
H2	(2) 2x8	(2) 2x6	(2) 2x
H3	(3) 2x8	(2) 2x6	(2) 2x
H4	(3) 2x10	(2) 2x6	(2) 2xo
H5	(2) 1¾"x9½" LVL	(2) 2x6	(2) 2x6

NOTES:
1. SEE DETAIL 2/S8 FOR TYPICAL HEADER DETAIL

JOIST HANGER SCHEDULE

JOIST SIZE	HANGER
2x12	LUS210
(2) 2x12	LUS210-2

NOTES:
1. PROVIDE HANGERS AS INDICATED UNLESS NOTED OTHERWISE ON PLAN OR DETAILS
2. JOIST HANGERS SHALL BE BY SIMPSON STRONG TIE OR ACCEPTED EQUIVALENT

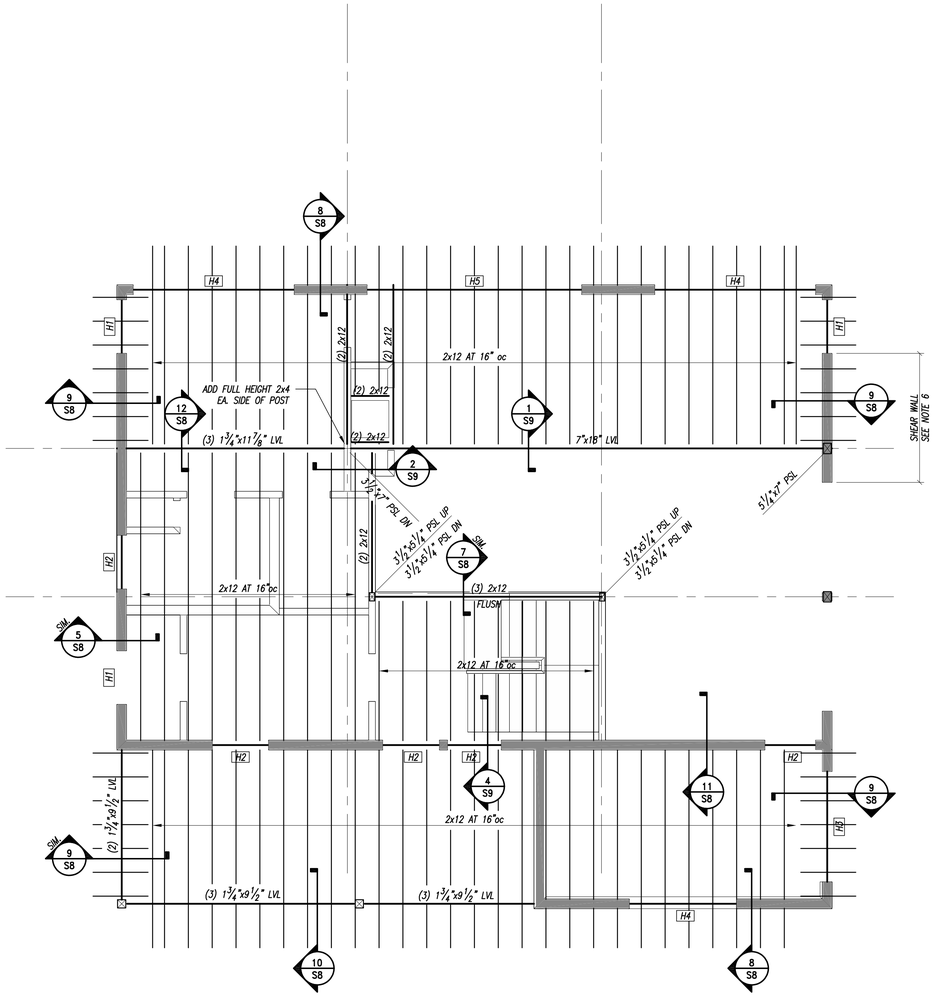

LOFT AND LOW ROOF FRAMING PLAN

1/4" = 1'-0"

PLAN NOTES:

1. REFER TO ARCH. FOR TOP OF SUBFLOOR ELEVATION
2. REFER TO ARCH. FOR TOP OF WALL PLATE ELEVATIONS.
3. INDICATES WOOD STUD BEARING WALLS. WALL STUDS SHALL BE SPACED AT 16" o.c. MAX. REFER TO ARCH. FOR WALL TYPES. EXTERIOR WALLS SHALL BE 2x6 AT 16" oc
4. EXTERIOR WALLS SHALL BE CONSTRUCTED PER SW-1 U.N.O. REFER TO SHEAR WALL SCHEDULE ON SHEET S4.0.
5. ALL EXTERIOR WALLS SHALL BE CONSIDERED SHEAR WALLS. WALLS SHALL BE SHEATHED WITH 15/32" APA RATED SHEATHING NAILED w/ 0.131"ø x 2½" LONG NAILS AT 4" oc AT ALL PANELS EDGES AND AT 12" oc AT INTERMEDIATE SUPPORTS. HORIZONTAL BLOCKING IS REQURIED AT ALL PANEL EDGES, U.N.O.
6. CONSTRUCT SHEAR WALL INDICATED AS FOLLOWS: 15/32" APA STRUCTURAL I RATED SHEATHING NAILED WITH 0.128"ø x 3" LONG NAILS AT 3" oc AT PANEL EDGES AND 12" oc AT INTERMEDIATE SUPPORTS. PROVIDE BLOCKING AND NAILING AT ALL HORIZONTAL PANEL JOINTS. SHEATHE INSIDE FACE OF WALL w/ 1/2" GYPSUM SHEATHING SCREWED AT 6" oc AT ALL PANEL EDGES AND AT 12" oc AT INTERMEDIATE SUPPORTS. ALL HORIZONTAL JOINTS SHALL BE BLOCKED AND SCREWED.

CITY OF PORTLAND, MAINE — RESURGAM

Reviewed for Code Compliance
Inspections Division
Approved with Conditions

Date: 12/11/17

Revisions:		
No:	Date:	Description:

M² STRUCTURAL ENGINEERING, P.C.
23 Thornbury Way
Windham, ME 04062
(207) 892-0983
info@m2se.com

Client: AMY FARRELL

Sheet Title: LOFT AND LOW ROOF FRAMING PLAN

Project Name: FARRELL RESIDENCE
GREAT DIAMOND ISLAND,
PORTLAND, MAINE

Project No:	17079
Designed By:	MJM
Drawn By:	MJM
Checked By:	MJM
Scale:	AS NOTED
Date:	09/25/2017

S4

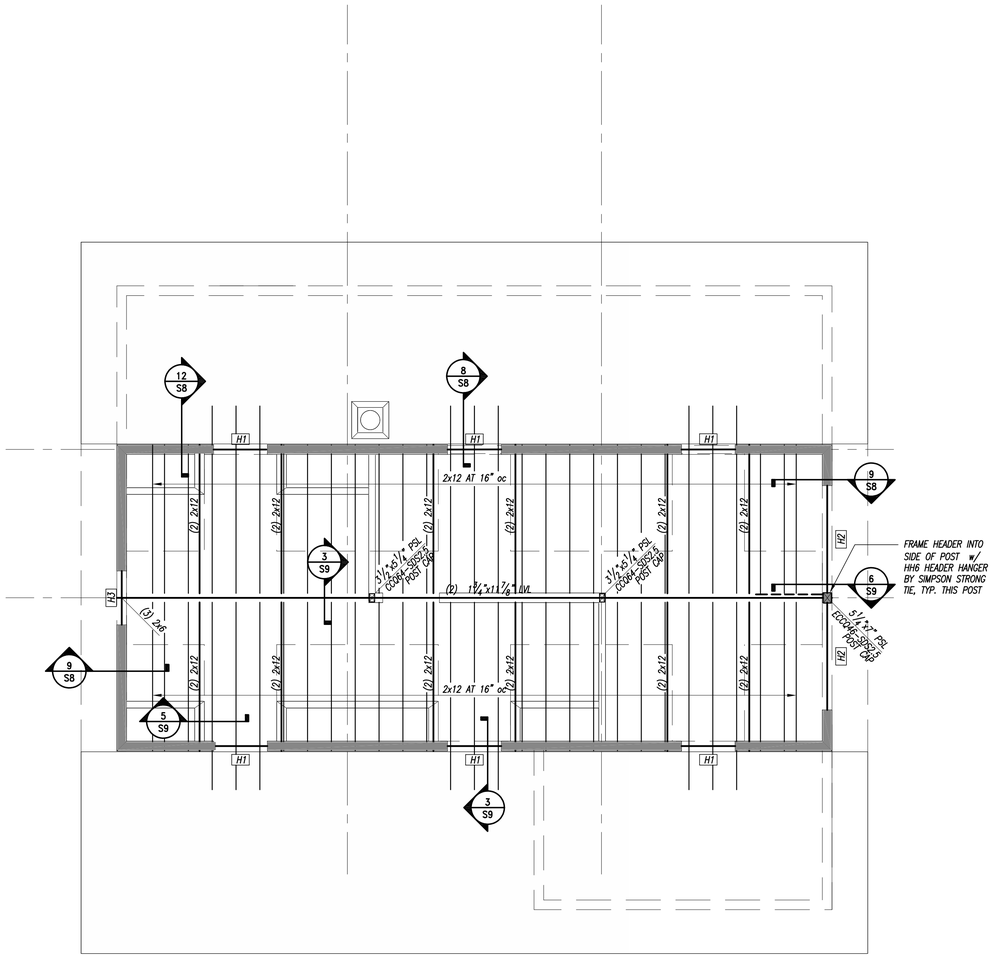

HEADER SCHEDULE

PLAN MARK	HEADER SIZE	JACK STUDS EA. END (U.N.O)	KING ST EA. END (U
H1	(2) 2x6	(1) 2x6	(1) 2x
H2	(2) 2x8	(2) 2x6	(2) 2x
H3	(3) 2x8	(2) 2x6	(2) 2x
H4	(3) 2x10	(2) 2x6	(2) 2xo
H5	(2) 1 3/4"x9 1/2" LVL	(2) 2x6	(2) 2x6

NOTES:
1. SEE DETAIL 2/S8 FOR TYPICAL HEADER DETAIL

ROOF FRAMING PLAN

1/4" = 1'-0"

PLAN NOTES:

1. REFER TO ARCH FOR T/ WALL PLATE ELEVATIONS.
2. ▬ INDICATES WOOD STUD BEARING WALLS
3. EXTERIOR WALLS SHALL BE 2x6 AT 16" oc, TYP., U.N.O.
4. Hx INDICATES HEADER MARK. SEE SCHEDULE THIS SHEET
5. ALL EXTERIOR WALLS SHALL BE CONSIDERED SHEAR WALLS. WALLS SHALL BE SHEATHED WITH 15/32" APA RATED SHEATHING NAILED w/ 0.131"ø x 2 1/2" LONG NAILS AT 4" oc AT ALL PANELS EDGES AND AT 12" oc AT INTERMEDIATE SUPPORTS. HORIZONTAL BLOCKING IS REQURIED AT ALL PANEL EDGES, U.N.O.

CITY OF PORTLAND, MAINE · RESURGAM

Reviewed for Code Compliance
Inspections Division
Approved with Conditions

Date: 12/11/17

Revisions:		
No:	Date:	Description:

M2 STRUCTURAL ENGINEERING, P.C.
23 Thornbury Way
Windham, ME 04062
(207) 892-0983
info@m2se.com

Client: AMY FARRELL

Sheet Title: ROOF FRAMING PLAN

Project Name: FARRELL RESIDENCE
GREAT DIAMOND ISLAND,
PORTLAND, MAINE

Project No:	17079
Designed By:	MJM
Drawn By:	MJM
Checked By:	MJM
Scale:	AS NOTED
Date:	09/25/2017

S5

This drawing is an instrument of professional service, and shall not be used, in whole or in part, for any project other than for which it was created without the express, written consent of M² Structural Engineering, P.C. Any unauthorized use, reuse, modification or alteration, including automated conversion of this document shall be at the user's sole risk without liability or legal exposure to M² Structural Engineering, P.C.

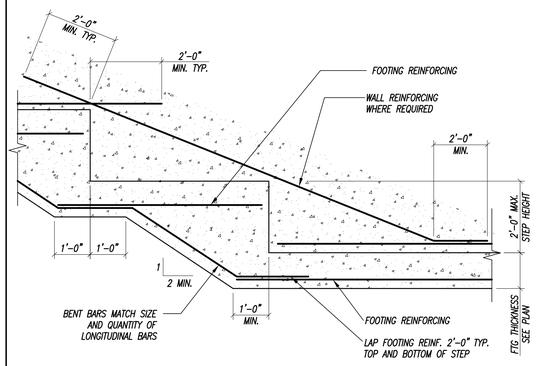

1 TYPICAL FOOTING STEP DETAIL

1/2" = 1'-0"

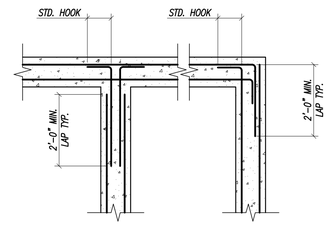

2 TYPICAL CORNER/INTERSECTION REINFORCING

1/2" = 1'-0"

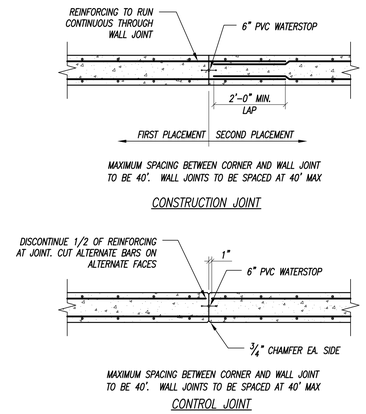

3 TYPICAL WALL CONSTRUCTION/CONTROL JOINT

1/2" = 1'-0"

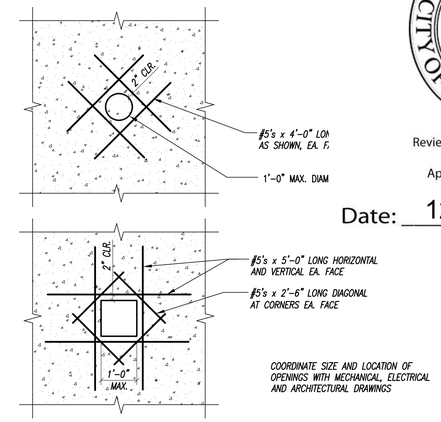

4 TYPICAL WALL PENETRATION DETAIL

1/2" = 1'-0"

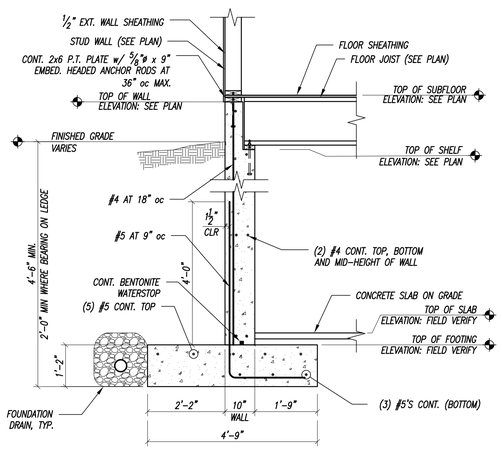

5 SECTION

1/2" = 1'-0"

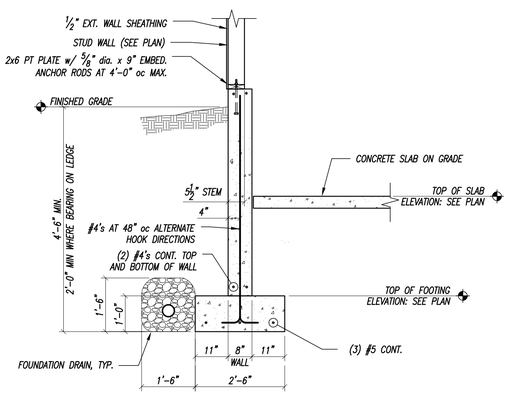

6 SECTION

1/2" = 1'-0"

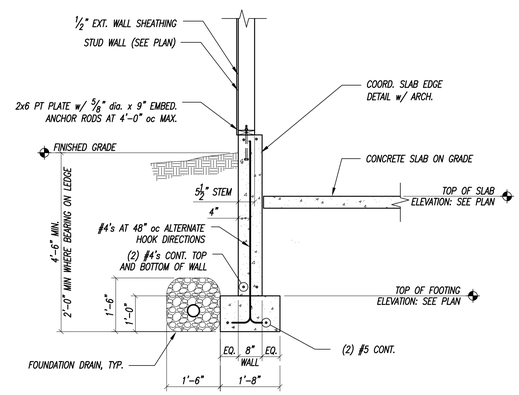

7 SECTION

1/2" = 1'-0"

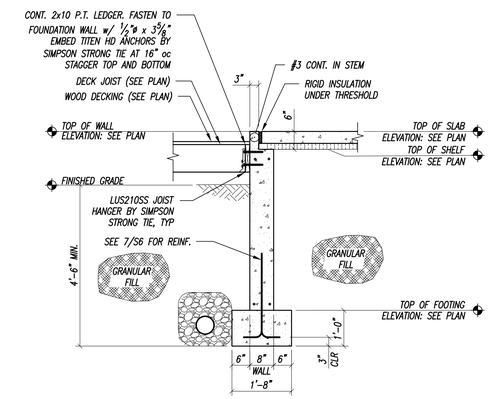

8 SECTION

1/2" = 1'-0"

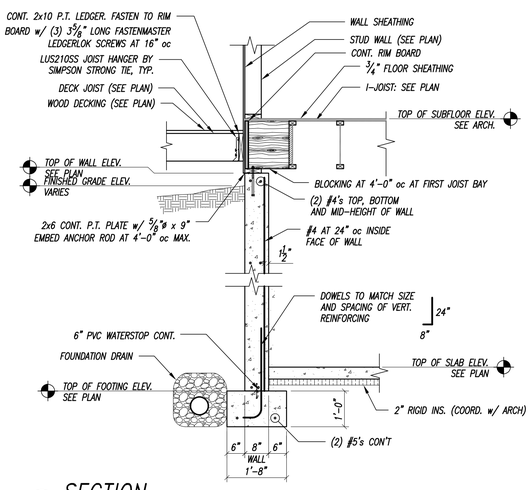

9 SECTION

1/2" = 1'-0"

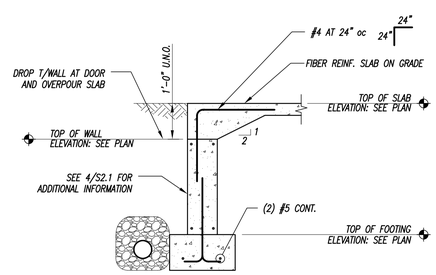

10 SECTION

1/2" = 1'-0"

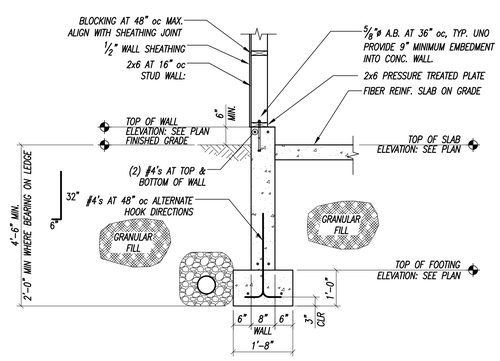

11 SECTION

1/2" = 1'-0"

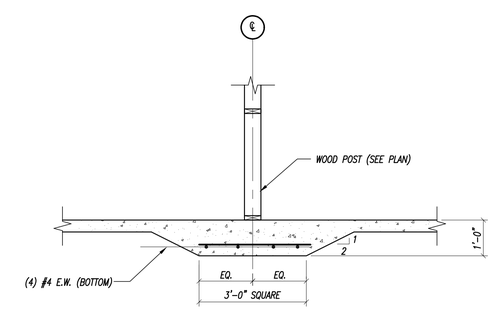

12 SECTION

1/2" = 1'-0"

This drawing is an instrument of professional service, and shall not be used, in whole or in part, for any project other than for which it was created without the express, written consent of M² Structural Engineering, P.C. Any unauthorized use, reuse, modification or alteration, including automated conversion of this document shall be at the user's sole risk without liability or legal exposure to M² Structural Engineering, P.C.

CITY OF PORTLAND, MAINE — RESURGAM

Reviewed for Code Compliance
Inspections Division
Approved with Conditions

Date: 12/11/17

Revisions:		
No:	Date:	Description:

M² STRUCTURAL ENGINEERING, P.C.
23 Thornbury Way
Windham, ME 04062
(207) 892-0983
info@m2se.com

Client: AMY FARRELL

Sheet Title: FOUNDATION SECTIONS AND DETAILS

Project Name: FARRELL RESIDENCE
GREAT DIAMOND ISLAND,
PORTLAND, MAINE

Project No:	17079
Designed By:	MJM
Drawn By:	MJM
Checked By:	MJM
Scale:	AS NOTED
Date:	09/25/2017

S6

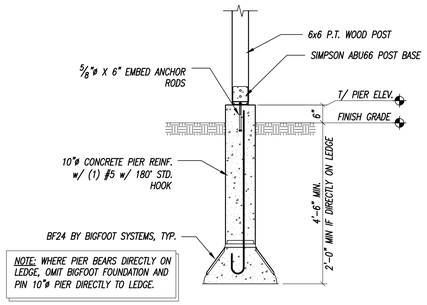

1 SECTION

1/2" = 1'-0"

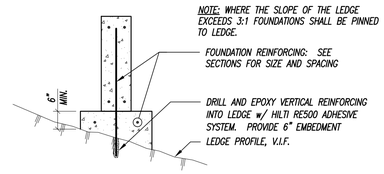

2B TYPICAL FOUNDATION ON SLOPED LEDGE

1/2" = 1'-0"

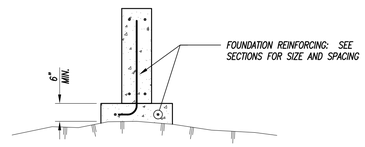

2A TYPICAL FOUNDATION ON LEDGE

1/2" = 1'-0"

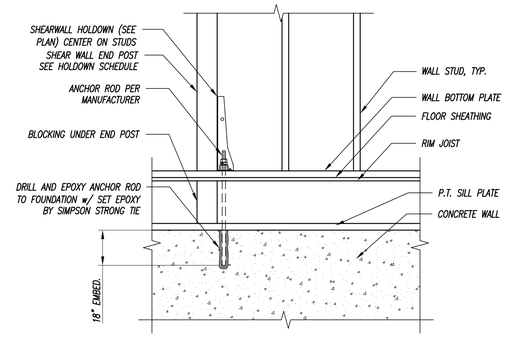

3 SECTION

3/4" = 1'-0"

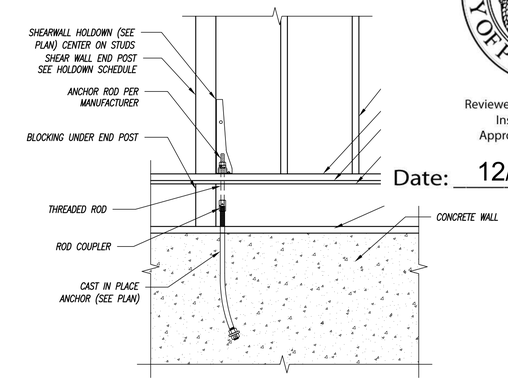

4 SECTION

3/4" = 1'-0"

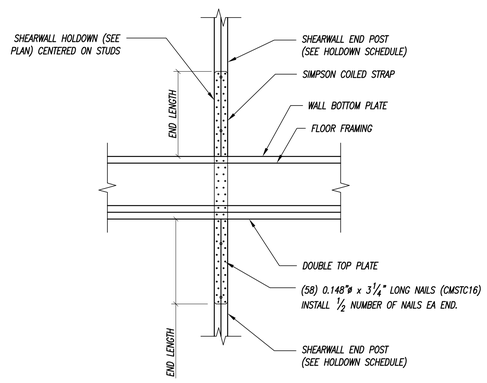

5 SECTION

3/4" = 1'-0"

HOLDOWN SCHEDULE

PLAN MARK	HOLDOWN	MIN. END POST	DETAIL	NOTES
HD-A	HDU5-SDS2.5	(3) 2x6	3/S7	-
HD-B	HDU14-SDS2.5	(4) 2x6	4/S7	CAST IN PLACE ANCHOR ROD REQUIRED (SEE PLAN)
HD-C	CMSTC16 COILED STRAP	(2) 2x6	5/S7	30" MIN. END LENGTH

CITY OF PORTLAND, MAINE — RESURGAM

Reviewed for Code Compliance
Inspections Division
Approved with Conditions

Date: 12/11/17

Revisions:		
No:	Date:	Description:

M2 STRUCTURAL ENGINEERING, P.C.
23 Thornbury Way
Windham, ME 04062
(207) 892-0983
info@m2se.com

Client: AMY FARRELL

Sheet Title: FOUNDATION SECTIONS AND DETAILS

Project Name: FARRELL RESIDENCE
GREAT DIAMOND ISLAND,
PORTLAND, MAINE

Project No:	17079
Designed By:	MJM
Drawn By:	MJM
Checked By:	MJM
Scale:	AS NOTED
Date:	09/25/2017

S7

This drawing is an instrument of professional service, and shall not be used, in whole or in part, for any project other than for which it was created without the express, written consent of M² Structural Engineering, P.C. Any unauthorized use, reuse, modification or alteration, including automated conversion of this document shall be at the user's sole risk without liability or legal exposure to M² Structural Engineering, P.C.

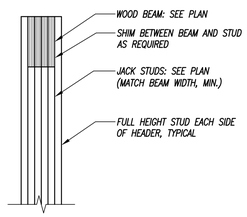

1 BEAM BEARING PERPENDICULAR TO WALL
3/4" = 1'-0"

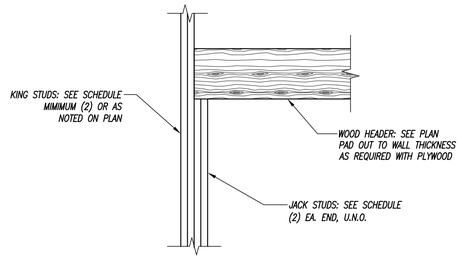

2 TYPICAL BEAM/HEADER DETAIL
3/4" = 1'-0"

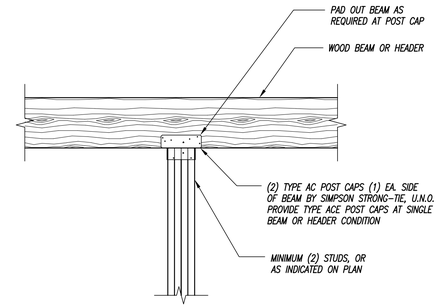

3 TYPICAL BEAM TO WOOD COLUMN DETAIL
3/4" = 1'-0"

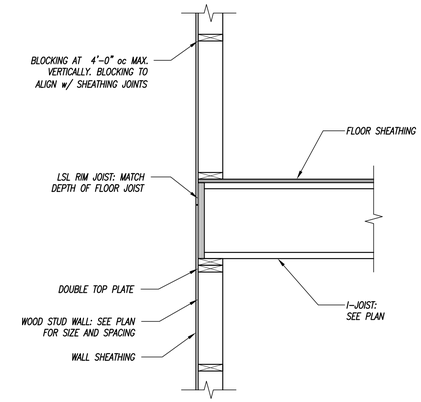

4 SECTION
3/4" = 1'-0"

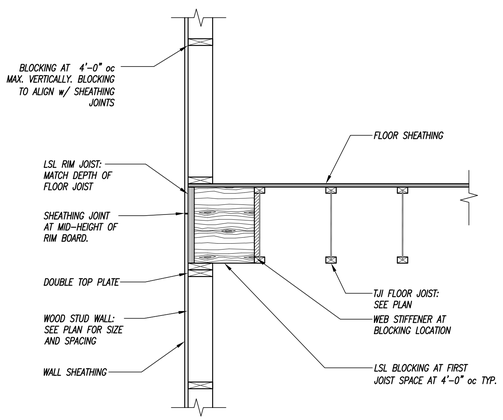

5 SECTION
3/4" = 1'-0"

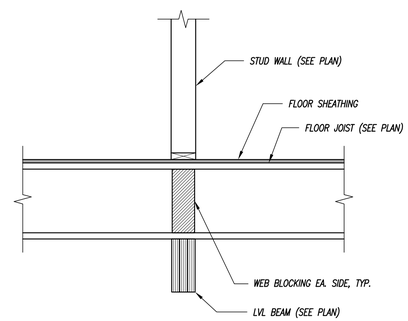

6 SECTION
3/4" = 1'-0"

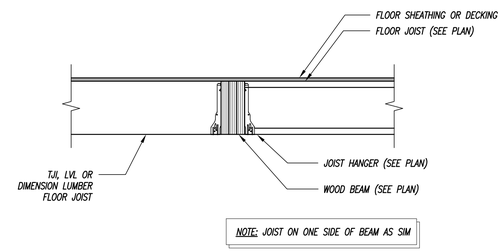

7 SECTION
3/4" = 1'-0"

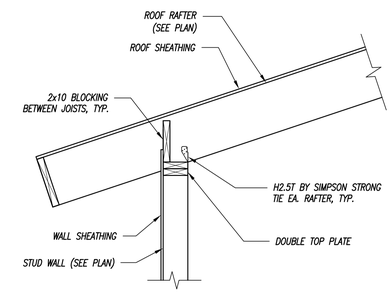

8 SECTION
3/4" = 1'-0"

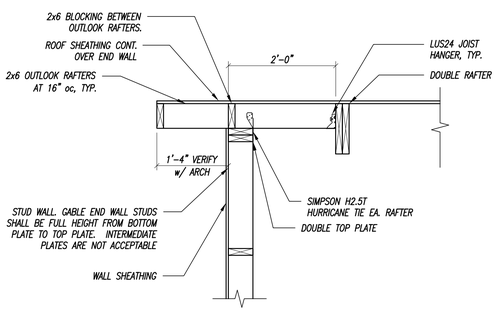

9 SECTION
3/4" = 1'-0"

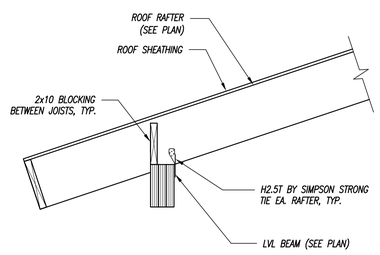

10 SECTION
3/4" = 1'-0"

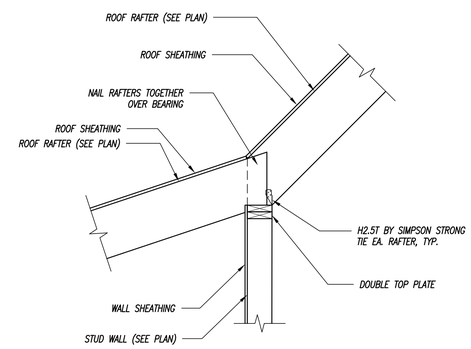

11 SECTION
3/4" = 1'-0"

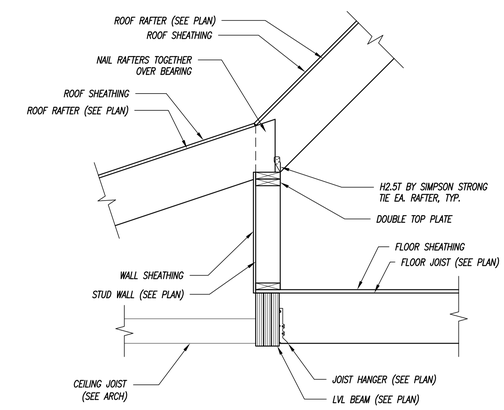

12 SECTION
3/4" = 1'-0"

CITY OF PORTLAND, MAINE · RESURGAM

Reviewed for Code Compliance
Inspections Division
Approved with Conditions

Date: 12/11/17

Revisions:		
No:	Date:	Description:

M2 STRUCTURAL ENGINEERING, P.C.
23 Thornbury Way
Windham, ME 04062
(207) 892-0983
info@m2se.com

Client: AMY FARRELL

Sheet Title: FRAMING SECTIONS AND DETAILS

Project Name: FARRELL RESIDENCE
GREAT DIAMOND ISLAND,
PORTLAND, MAINE

Project No:	17079
Designed By:	MJM
Drawn By:	MJM
Checked By:	MJM
Scale:	AS NOTED
Date:	09/25/2017

S8

This drawing is an instrument of professional service, and shall not be used, in whole or in part, for any project other than for which it was created without the express, written consent of M² Structural Engineering, P.C. Any unauthorized use, reuse, modification or alteration, including automated conversion of this document shall be at the user's sole risk without liability or legal exposure to M² Structural Engineering, P.C.

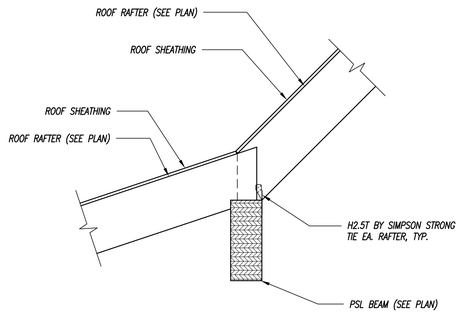

1 SECTION
3/4" = 1'-0"

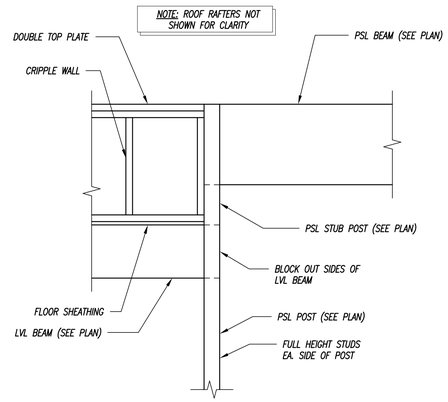

2 SECTION
3/4" = 1'-0"

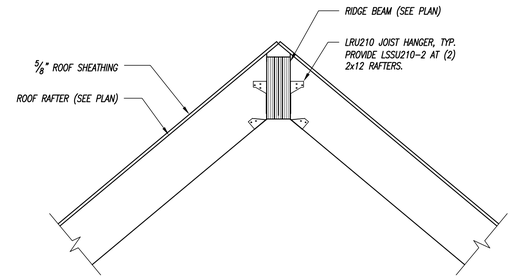

3 SECTION
3/4" = 1'-0"

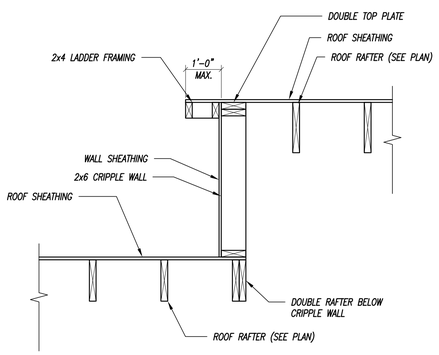

5 SECTION
3/4" = 1'-0"

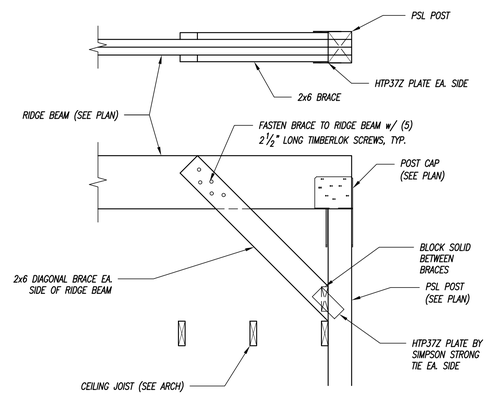

6 SECTION
3/4" = 1'-0"

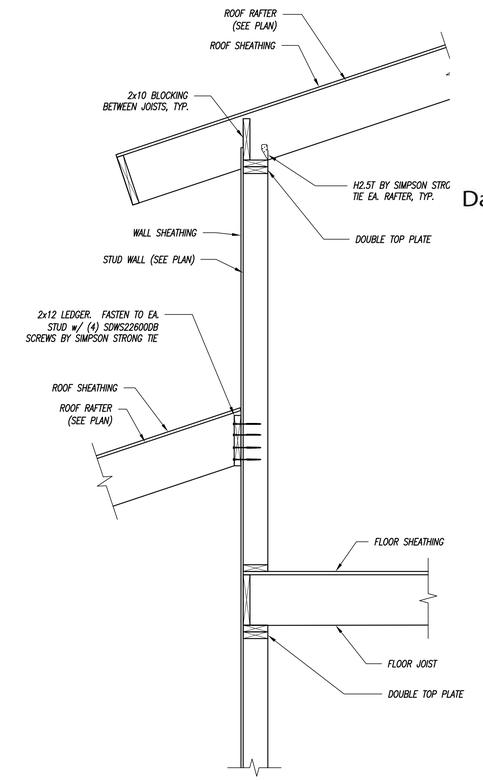

4 SECTION
3/4" = 1'-0"

This drawing is an instrument of professional service, and shall not be used, in whole or in part, for any project other than for which it was created without the express, written consent of M² Structural Engineering, P.C. Any unauthorized use, reuse, modification or alteration, including automated conversion of this document shall be at the user's sole risk without liability or legal exposure to M² Structural Engineering, P.C.

CITY OF PORTLAND, MAINE — RESURGAM

Reviewed for Code Compliance
Inspections Division
Approved with Conditions

Date: 12/11/17

Revisions:		
No:	Date:	Description:

M² STRUCTURAL ENGINEERING, P.C.
23 Thornbury Way
Windham, ME 04062
(207) 892-0983
info@m2se.com

Client: AMY FARRELL

Sheet Title: FRAMING SECTIONS AND DETAILS

Project Name: FARRELL RESIDENCE
GREAT DIAMOND ISLAND,
PORTLAND, MAINE

Project No:	17079
Designed By:	MJM
Drawn By:	MJM
Checked By:	MJM
Scale:	AS NOTED
Date:	09/25/2017

S9