ASSOCIATED DESIGN PARTNERS INC.
e-mail: adp@
80 Leighton Road • Falmouth, Maine 04105

RESURGAM CITY OF PORTLAND, MAINE
Reviewed for Code Compliance
Inspections Division
Approved with Conditions
Date: 03/25/15

November 18, 2014 14374

Jim McKenna
President & CEO
RedZone Wireless, LLC
Rockland, ME 04841

RE: Structural review of existing water standpipe, Great Diamond Island, Maine.

Dear Jim,

At your request, I have performed a limited structural evaluation of the existing steel water standpipe locate on the north end of Great Diamond Island, ME. I understand that RedZone Wireless LLC is proposing to install three new cellular antenna arrays on top of the existing stand pipe. The purpose of my evaluation is to determine if the existing stand pipe can support the loads applied from the proposed antenna's, along with the 2009 IBC minimum design loads. Warren Gerow, PE from Associated Design Partners Inc visited the site on 11/18/14 to observe the condition of the tank, take field measurements, and collect photographs.

Structure Description

It was represented to me that this standpipe was originally constructed circa WWII to serve the military establishment located on the north end of the island. The standpipe is no longer used for water storage, and I understand it has stood empty for some time now. The steel and concrete elements of the standpipe show signs of weather induced deterioration and corrosion typical of exterior structures of this age that have not been maintained to a serviceable level. This structure is not classified as an "occupied building", and represents a relatively low hazard to people and property.

The dimensions of the tank are 30ft +/- in diameter x 60ft +/- tall. The walls consist of ½" thick welded steel plate, and the roof consists of welded steel plate in a cone shape. Inside the tank the floor is also welded steel plate. The thickness of the roof and floor plate could not be verified at the time of our visit, and is assumed to be the same thickness as the wall plate for the purpose of this evaluation. All of the exposed steel is un-coated and shows signs of pitting and surface corrosion. At the perimeter of the base of the standpipe there are (8) ¾" diameter steel anchor bolts that are set into a steel sleeve cast into the concrete base. The anchors are corroded and no longer provide positive anchorage.

Reviewed for Code Compliance
Inspections Division
Approved with Conditions

Date: 03/25/15

I understand that the proposed antenna arrays consist of the following equ

RFS Polarized Antenna	APXV9TM14-ALU-I20
Sector mount 10 ft Wide boom	SF-TP10-B
Radio Head 2x40	Alcatel/Lucent 9442 RRH/700U
Microwave Dish	SC3-W100AMPT
Associated Cables and Hardware	Number 12 Size 1/2

There will be three arrays installed, and 120 degree sectors around the standpipe. Each array will weigh approximately 560 lbs.

Structural Analysis

In order to perform the analysis we made a site visit to measure and document the size, span, and geometry of the standpipe. At this time our analysis is limited to an abbreviated analysis of the standpipe structure for dead, snow, wind, and earthquake loads. To facilitate the analysis, the following assumptions have been made:

- Grade of steel for the standpipe plate is A36.
- The anchor bolts do not provide base sliding or overturning resistance.
- My analysis is based on the provisions of IBC 2009, ASCE 7-05, AISC 9th ed, and AWWA D100-11 Standard for Welded Carbon Steel Tanks for Water Storage.
- Friction factor = 0.45 for steel base sliding on concrete.

In my opinion, the existing standpipe in its current condition can support the minimum design loads (snow, ice, wind, seismic) and additional dead loads from the proposed antenna arrays, without becoming overstressed. My opinion is based on the results of my analysis, and assumptions as stated herein. Attached are calculations in support of my findings. My calculation indicate that the dead load of the tank alone is sufficient to resist the ASCE 7-05 design forces for overturning and sliding forces from wind/seismic events. Atmospheric Ice loads were also applied to the antenna array, equipment, and standpipe surfaces in the analysis.

Though there are local elements of the standpipe that are corroded and deteriorated near the perimeter of the base, it is my opinion that the standpipe can serve the intended purpose of providing a mounting surface for the proposed antenna arrays without modifications, as there is a very low risk to the public or properties surrounding the standpipe. The design of the mounting system and hardware for the proposed antenna array is not by Associated Design Partners Inc, and should be completed by a Maine Licensed professional engineer.

RESURGAM, CITY OF PORTLAND, MAINE
Reviewed for Code Compliance
Inspections Division
Approved with Conditions
Date: 03/25/15

Summary

My opinions and interpretations are based on field measurements, observa
assumptions, analysis, and code research as outlined here-in.

Ultimately, as described in the IBC building codes, interpretation for code compliance rests with the Authority Having Jurisdiction. Therefore, this report should be presented to the local municipality's Code Enforcement Office so that they can review our analysis findings and opinions and have opportunity to either approve or reject based upon their jurisdictional authority.

Sincerely,

Aaron S. Wilson, PE
Vice President

STATE OF MAINE
AARON S. WILSON
No. 10429
LICENSED
PROFESSIONAL ENGINEER

Atts: Structural Calculations,
Equipment data sheets.
Photos

CHECK EXG ELEVATED WATER TANK FOR NEW WIRELESS

TANK $\phi = 30'$
TANK $H = 60'$
WALLS
WALL $t = 1/2''$ $D = (0.5''/12)(490\#/ft^3)(60')(2\pi(15)) + 2(0.5''/12)(490)(\pi($
LID + BU

Reviewed for Code Compliance
Inspections Division
Approved with Conditions
Date: 03/25/15

WIND

ASCE 7-05
$V = 100$ MPH
EXP C, WATER SURFACE W/IN 2000FT, IN HURRICANE PRONE REGION.
$K_d = 0.95$ T. 4 ROUND TANKS
$K_h = K_z = 0.89$ @ $h = 70'$
$I =$ CAT. I $I = 0.87$ UN-OCCUPIED STRUCTURE
$G = 0.85$ 6.5.8.1 RIGID STRUCTURE

SEC 6.5.15
$F_w = q_z G C_f A_s$

$h/d = 70/30 = 2.33$
$q_z = 19$ PSF
$D \times \sqrt{q_z} = 30' \times \sqrt{19} = 130 > 2.5$
$C_f = 0.52$ F. 6-21
$A_f = 30' \times 60' = 1800$ SF

$F_w = 19(0.85)(0.52)1800$
$F_w = 15.2^k$ AT $h = 30'$

SEISMIC
T. 15.4-2
FLAT BOTTOM GROUND SUPPORTED TANKS
SELF ANCHORED $R = 2.5$ $C_d = 2.0$
MECH ANCHORED $R = 3.0$ $C_d = 2.5$

CHECK RIGID STRUCTURE
FUND PERIOD

$$T_i = 2\pi\sqrt{\frac{\sum_{i=1}^{n} f_i \delta_i^2}{g \sum_{i=1}^{n} f_i \delta_i}}$$

RISA TEST LOAD $= 10^k$
$F_1 = 10^k$ $\delta_i = 0.01''$ @ $h = 60'$
$g = 32.17$ FT/S^2

$$T_i = 2\pi\sqrt{\frac{10^k \times (0.01'')^2}{32.17(12)(10 \times 0.01)}} = 0.032_s < 0.06_s$$ RIGID PER 15.4.2

ASSOCIATED DESIGN PARTNERS INC.
80 Leighton Road
Falmouth, Maine 04105
Office: (207) 878-1751
Fax: (207) 878-1788
E-Mail: adp@adpengineering.com

PROJECT NUMBER 14374
PROJECT TITLE DIAMOND ISLAND
DATE 11/17/14
SHEET 1 OF

$V = 0.3\, S_{DS}\, W I$ 15.4-5

$I = 1.0$

$S_{DS} = 0.302$

$W = 122.7^k$

SITE CLASS C

$V = 0.3(0.302)(122.7)(1)$

$V = 11.1^k$/TANK $< 15.2^k$

WIND CONTROLS

EMPTY TANK, SECT 15.7 EXCLUDED

Reviewed for Code Compliance
Inspections Division
Approved with Conditions

Date: 03/25/15

EQUIPMENT WEIGHTS (DEAD) SIZE

POLARIZED ANTENNA	63#	54"x14"x4"
10 FT BOOM	352#	40LF OF 2 3/8" OD PIPE
ALCATEL RADIO HEAD	50#	15"x15"x8"
DISH SC3	40#	3FT DIA
CABLES	50#	
	560#/ SECTOR - 3 SECTORS 120° EQUAL.	

ICE LOADS

USE 2" ICE ACCUMULATION ON ALL EQUIP (V FT

ANTENNA $V_i = (58"\times 18"\times 8") - (54"\times 14"\times 4") = 3.1$

BOOM $V_i = 40LF \times (\pi(6.5^2)/4 - \pi(2.5^2)/4) = 7.9$

RADIO HEAD $V_i = (19\times 19\times 12) - (15\times 15\times 8) = 1.5$

DISH $V_i = 0.66(\pi(3.33^2/4) - 0.33(\pi(3)^2/4)) = 3.41$

$16\ FT^3$

$W_i = 59\#/FT^3 \times 16FT^3 = 950\#$ /SECTOR

WIND ON ICE

$V = 40$ MPH $q_z = 3PSF$

$F_W = 3(0.85)0.52(2100) = 2.8^k$ ON MAIN TANK

$F_W = 1.0^k$ ON ANTENNA ARRAYS (CONSERVATIVE)

ASSOCIATED DESIGN PARTNERS INC.
80 Leighton Road
Falmouth, Maine 04105
Office: (207) 878-1751
Fax: (207) 878-1788
E-Mail: adp@adpengineering.com

PROJECT NUMBER 14374

PROJECT TITLE Diamond Is Tower

DATE 11/17/14

SHEET 2 OF

Reviewed for Code Compliance
Inspections Division
Approved with Conditions

Date: 03/25/15

SNOW LOAD

$P_g = 50 PSF$

$P_s = 0.7(50)(1.2)(0.9) = 38 PSF \times \pi(15^2)/4 = 6.$

PER RISA

TANK IS SELF ANCHORED (NO UPLIFT)

BASE SHEAR = 18.12 K

EXG ANCHOR BOLTS CORRODED.

CHECK FRICTIONAL SLIDING RESISTANCE

$A_b = \pi(15')^2/4 = 176.7 FT^2$ $R_H/A_b = 18.12^K/176.7 FT^2 = 103 PSF$

$\mu = 0.45$ CONCRETE TO STEEL

$R_{nh} = \mu R_v/A_b = 0.45(122.7)/176.7 = 312 PSF > 102 PSF$

ANCHOR BOLTS NOT REQ'D. BASE SLIDING RESISTED BY FRICTION.

ANTENNA, POLES, HARDWARE, MOUNTING BY OTHERS

FOUNDATION IS UNKNOWN - NO ANALYSIS CAN BE COMPLETED AT THIS TIME

AWWA D100-11 STANDARD FOR WELDED CARBON STEEL TANKS.

ALLOWABLE AXIAL STRESS

$F_a = F_L K_\varphi$

ALLOW BENDING STRESS

$F_b = F_L$

FIND F_L ASSUME CLASS 1 (LOWEST) MATERIAL

SEC. 3.4.3.1.1

$t/12 = 1/2"/(15' \times 12"/FT) = 0.0027 < (t/12)_c = 0.0031$

∴ ELASTIC BUCKLING CONTROLS

$F_L = 17.5(10)^5(t/12)(1 + 50000(t/12)^2)$

$F_L = 6447 PSI = 6.4 KSI$

$Kl/r = \frac{2.0 \text{ (SINGLE PEDESTAL TANK)} \times 60' \times 12}{126.7 in} = 11.36$ USE 25

$F_a = 5742 psi = 5.7 KSI$

ACTUAL STRESS

$f_a = 0.23 KSI < 5.7 KSI$ ✓

$f_b = 0.15 KSI < 6.4 KSI$

COMBINED BENDING & AXIAL COMPRESSION

$f_a/F_a + f_b/F_b = .23/5.7 + 0.15/6.4 = 0.06 < 1.0$ ✓

ASSOCIATED DESIGN PARTNERS INC.
80 Leighton Road
Falmouth, Maine 04105
Office: (207) 878-1751
Fax: (207) 878-1788
E-Mail: adp@adpengineering.com

PROJECT NUMBER 14374

PROJECT TITLE DIAMOND IS TOWER

DATE 11/17/14

SHEET 3 OF

ASSOCIATED DESIGN PARTNERS INC.
e-mail: adp
80 Leighton Road • Falmouth, Maine 04105

RESURGAM CITY OF PORTLAND, MAINE
Reviewed for Code Compliance
Inspections Division
Approved with Conditions

SEISMIC CODE STUDY

Date: 03/25/15

Based on ASCE 7-05 Design Guidelines - Non-Structural Components

Job:	Tower	Date:	11/17/2014
Loc:	Diamond Island ME	By:	ASW

Code Sec.			
11.4.1	S_s =	0.294	F. 22-1
11.4.2	Site Class	C	Very Dense Soil and Soft Rock
11.4.3	Fa=	1.54	T. 11.4-1
	Fv=	2.4	T. 11.4-2
	Sms=	0.45	Eq. 11.4-1
11.4.4	S_{DS}=	0.302	Eq. 11.4-3
11.5.1	Occupancy Category	II	T1-1
	I=	1.00	
	Ip=	1	Sec 13.1.3

13.3-1 Seismic Design Force

Fp = [(0.4*ap*Sds*Wp)/(Rp/Ip)] * [1+2(z/h)] Eq. 13.3-1

Fpmax = 1.6*Sds*Ip*Wp

Fpmin = 0.3*Sds*Ip*Wp

Element			Fasteners		
ap =	1.0	T 13.5-1	ap =	1.25	T 13.5-1
Rp =	2.5	T 13.5-1	Rp =	1.0	T 13.5-1
Wp =	15	psf	Wp =	15	psf
z =	60	ft	z =	60	ft
h =	60	ft	h =	60	ft
Fpv =	0.91	psf	Fpv =	0.91	psf
Fp' =	2.17	psf	Fp' =	6.79	psf
Fpmax =	7.2	psf	Fpmax =	7.2	psf
Fpmin =	1.4	psf	Fpmin =	1.4	psf
Fp =	**3.08**	**psf**	**Fp =**	**7.7**	**psf**

7.7psf< 14.8 psf Wind Controls Out of Plane Design

Reviewed for Code Compliance
Inspections Division
Approved with Conditions

Date: 03/25/15

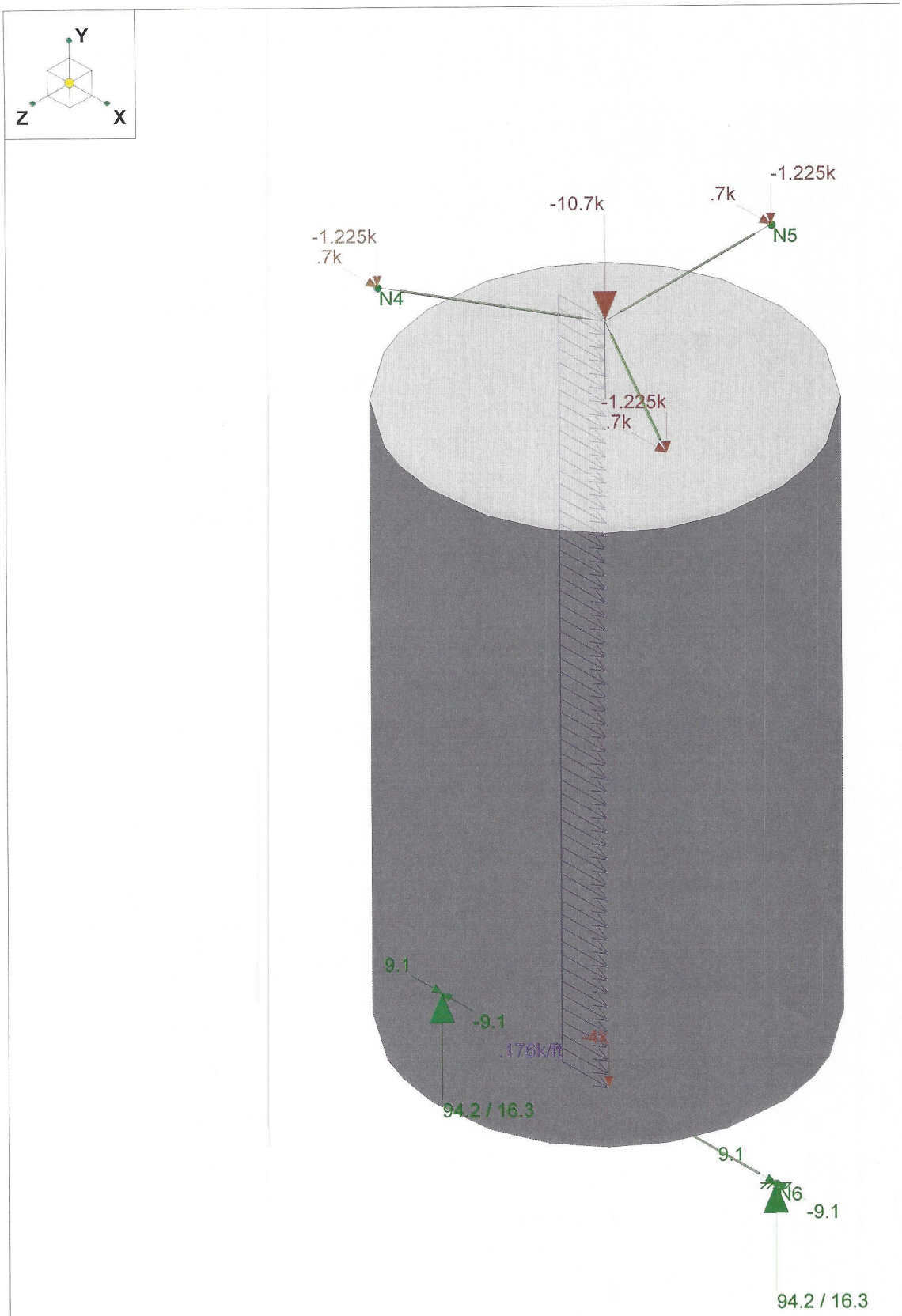

Loads: LC 5, (3) D+S+I+W(X)
Envelope Only Solution
Z-direction Reaction Units are k and k-ft (Enveloped)

Associated Design Partner...	Diamond Island Water Tank	SK - 1
ASW		Nov 18, 2014 at 3:04 PM
14372		TANK1.r3d

RESURGAM CITY OF PORTLAND, MAINE
Reviewed for Code Compliance
Inspections Division
Approved with Conditions
Date: 03/25/15

Envelope Member Section Stresses

	Member	Sec		Axial[ksi]	LC	y Shear[...	LC	z Shear[...	LC	y-Top[ksi]	LC	y-Bot[ksi]	LC				
1	M1	1	max	.23	5	.064	3	0	1	.15	4	.15	3	0	1	0	1
2			min	.132	7	-.064	4	0	1	-.15	3	-.15	4	0	3	0	1
3		2	max	.179	5	.051	3	0	1	.092	4	.092	3	0	1	0	3
4			min	.101	7	-.051	4	0	1	-.092	3	-.092	4	0	3	0	1
5		3	max	.128	5	.037	3	0	1	.048	4	.048	3	0	1	0	3
6			min	.071	7	-.037	4	0	1	-.048	3	-.048	4	0	3	0	1
7		4	max	.076	5	.024	3	0	1	.017	4	.017	3	0	1	0	3
8			min	.04	7	-.024	4	0	1	-.017	3	-.017	4	0	3	0	1
9		5	max	.025	5	.011	3	0	1	0	1	0	1	0	1	0	3
10			min	.01	7	-.011	4	0	1	0	1	0	1	0	3	0	1
11	M5	1	max	0	4	0	1	0	1	0	1	0	1	0	1	0	1
12			min	0	3	0	1	0	1	0	1	0	1	0	1	0	1
13		2	max	0	4	0	1	0	1	0	1	0	1	0	1	0	1
14			min	0	3	0	1	0	1	0	1	0	1	0	1	0	1
15		3	max	0	4	0	1	0	1	0	1	0	1	0	1	0	1
16			min	0	3	0	1	0	1	0	1	0	1	0	1	0	1
17		4	max	0	4	0	1	0	1	0	1	0	1	0	1	0	1
18			min	0	3	0	1	0	1	0	1	0	1	0	1	0	1
19		5	max	0	4	0	1	0	1	0	1	0	1	0	1	0	1
20			min	0	3	0	1	0	1	0	1	0	1	0	1	0	1
21	M6	1	max	0	3	0	1	0	1	0	1	0	1	0	1	0	1
22			min	0	4	0	1	0	1	0	1	0	1	0	1	0	1
23		2	max	0	3	0	1	0	1	0	1	0	1	0	1	0	1
24			min	0	4	0	1	0	1	0	1	0	1	0	1	0	1
25		3	max	0	3	0	1	0	1	0	1	0	1	0	1	0	1
26			min	0	4	0	1	0	1	0	1	0	1	0	1	0	1
27		4	max	0	3	0	1	0	1	0	1	0	1	0	1	0	1
28			min	0	4	0	1	0	1	0	1	0	1	0	1	0	1
29		5	max	0	3	0	1	0	1	0	1	0	1	0	1	0	1
30			min	0	4	0	1	0	1	0	1	0	1	0	1	0	1

Envelope Member Section Forces

	Member	Sec		Axial[k]	LC	y Shear[k]	LC	z Shear[k]	LC	Torque[k-ft]	LC	y-y Mome...	LC	z-z Mome...	LC
1	M1	1	max	129.668	5	18.121	3	0	1	0	3	0	1	633.655	3
2			min	74.579	7	-18.121	4	0	1	0	4	0	3	-633.655	4
3		2	max	100.845	5	14.341	3	0	1	0	3	0	1	390.191	3
4			min	57.285	7	-14.341	4	0	1	0	4	0	3	-390.191	4
5		3	max	72.022	5	10.561	3	0	1	0	3	0	1	203.427	3
6			min	39.991	7	-10.561	4	0	1	0	4	0	3	-203.427	4
7		4	max	43.198	5	6.781	3	0	1	0	3	0	1	73.364	3
8			min	22.697	7	-6.781	4	0	1	0	4	0	3	-73.364	4
9		5	max	14.375	5	3.001	3	0	1	0	3	0	1	0	8
10			min	5.403	7	-3.001	4	0	1	0	4	0	3	0	5
11	M5	1	max	9.06	4	94.162	4	0	1	0	3	0	4	626.949	4
12			min	-9.06	3	16.318	7	0	1	0	1	0	3	177.865	7
13		2	max	9.06	4	94.162	4	0	1	0	3	0	4	273.842	4
14			min	-9.06	3	16.318	7	0	1	0	1	0	3	116.674	7
15		3	max	9.06	4	94.162	4	0	1	0	3	0	3	79.264	3
16			min	-9.06	3	16.318	7	0	1	0	1	0	4	-79.264	4
17		4	max	9.06	4	94.162	4	0	1	0	3	0	3	-5.708	7
18			min	-9.06	3	16.318	7	0	1	0	1	0	4	-432.37	4
19		5	max	9.06	4	94.162	4	0	1	0	3	0	3	-66.899	7
20			min	-9.06	3	16.318	7	0	1	0	1	0	4	-785.477	4
21	M6	1	max	9.06	3	-16.318	8	0	1	0	1	0	4	-66.899	8

RESURGAM CITY OF PORTLAND, MAINE
Reviewed for Code Compliance
Inspections Division
Approved with Conditions
Date: 03/25/15

Envelope Member Section Forces (Continued)

	Member	Sec		Axial[k]	LC	y Shear[k]	LC	z Shear[k]	LC	Torque[k-ft]	LC	y-y Mom			
22			min	-9.06	4	-94.162	3	0	1	0	3	0			
23		2	max	9.06	3	-16.318	8	0	1	0	1	0			
24			min	-9.06	4	-94.162	3	0	1	0	3	0	3	-432.37	3
25		3	max	9.06	3	-16.318	8	0	1	0	1	0	4	79.264	4
26			min	-9.06	4	-94.162	3	0	1	0	3	0	3	-79.264	3
27		4	max	9.06	3	-16.318	8	0	1	0	1	0	3	278.291	5
28			min	-9.06	4	-94.162	3	0	1	0	3	0	4	116.674	8
29		5	max	9.06	3	-16.318	8	0	1	0	1	0	3	626.949	3
30			min	-9.06	4	-94.162	3	0	1	0	3	0	4	177.865	8

ANSI
(Revision of ANSI/

Reviewed for Code Compliance
Inspections Division
Approved with Conditions

Date: 03/25/15

American Water Works Association

The Authoritative Resource on Safe Water®

AWWA Standard

Welded Carbon Steel Tanks for Water Storage

STANDARD
Since 1881

Approved American National Standard
ANSI

Effective date: July 1, 2011.
First edition approved by AWWA Board of Directors June 23, 1991.
This edition approved Jan. 23, 2011.
Approved by American National Standards Institute April 8, 2011.

6666 West Quincy Avenue
Denver, CO 80235-3098
T 800.926.7337
www.awwa.org

Advocacy
Communications
Conferences
Education and Training
Science and Technology
Sections

Copyright © 2011 American Water Works Association. All Rights Reserved.

RFS CompactLine (SB) & CompactLine EASY (SC)

Reviewed for Code Compliance
Inspections Division
Approved with Conditions

Date: 03/25/15

Compact antennas optimized for integrated applications

Designed for: **Dense urban areas, metropolitan and suburban locations, aggregation points**

Installed on: **Rooftop poles or towers**

Featuring:

- Support for integrated radios to **reduce costs**, installation complexity and time
- Tested and validated **ultra-high** (ETSI EN 302 217 Class 3, FCC Class A) **electrical performance**
- Low-profile design to **reduce transportation requirements, wind load and antenna weight**
- Simplified mounting design to **accelerate installation**
- Hardcover radomes
- Support for **winds up to 252 km/h** (155 mph)
  Note: Antennas 1.2 m (4 ft) and larger support wind speeds up to 200 km/h (125 mph) by default but can be enhanced to support winds up to 252 km/h (155 mph)
- Supports for **winds up to 320 km/h** (198 mph) on the new SB1/SBX1 antennas
  Note: SB1/SBX1 revision C has been introduced in July 2013
- An **optional sway bar** for antennas 0.9 m (3 ft) and larger for added assurance in case mistakes are made during installation

Available in:

- Frequencies ranging **from 5.925 GHz to 52.6 GHz** with support for three wideband frequency ranges (5.925-7.125, 7.125-8.5 and 10-11.7) to reduce antenna requirements and simplify logistics
- Sizes ranging **from 0.3 m (1 ft) to 1.8 m (6 ft)**
- **Single- and dual-polarized** models with the ability to upgrade from single to dual polarization and change frequencies in the field[1] **CompactLine EASY models**, which are **extra light and easy** to transport, deploy and upgrade

[1] Please contact your RFS representative to verify which RFS CompactLine antenna models support these upgrades in the field.

Integrated radios, compact design minimize TCO

RESURGAM. CITY OF PORTLAND, MAINE
Reviewed for Code Compliance
Inspections Division
Approved with Conditions
Date: 03/25/15

Antenna models

Frequency Range (GHz)	Sizes (m)	Sizes (ft)	Model Name (Single Polarized)	Model Name (Dual Polarized)
5.925-7.125	0.9	3	SC3-W60[1 2]	SCX3-W60[1 2]
	1.2	4	SB4-W60[1]	SBX4-W60[1]
	1.8	6	SB6-W60[1]	SBX6-W60[1]
7.125-8.5	0.6	2	SC2-W71[1]	SCX2-W71[1]
	0.9	3	SC3-W71[1]	SCX3-W71[1]
	1.2	4	SB4-W71[1]	SBX4-W71[1]
	1.8	6	SB6-W71[1]	SBX6-W71[1]
10-11.7	0.6	2	SC2-W100[1]	SCX2-W100[1]
	0.9	3	SC3-W100[1]	SCX3-W100[1]
	1.2	4	SB4-W100[1]	SBX4-W100[1]
	1.8	6	SB6-W100[1]	SBX6-W100[1]
12.7-13.25	0.3	1	SB1-127	SBX1-127
	0.6	2	SC2-127	SCX2-127
	0.9	3	SC3-127	SCX3-127
	1.2	4	SB4-127	SBX4-127
	1.8	6	SB6-127	SBX6-127
14.2-15.35	0.3	1	SB1-142	SBX1-142
	0.6	2	SC2-142	SCX2-142
	0.9	3	SC3-142	SCX3-142
	1.2	4	SB4-142	SBX4-142
	1.8	6	SB6-142	SBX6-142
17.7-19.7	0.3	1	SB1-190	SBX1-190
	0.6	2	SC2-190	SCX2-190
	0.9	3	SC3-190	SCX3-190
	1.2	4	SB4-190	SBX4-190
	1.8	6	SB6-190	SBX6-190
21.2-23.6	0.3	1	SB1-220	SBX1-220
	0.6	2	SC2-220	SCX2-220
	0.9	3	SC3-220	SCX3-220
	1.2	4	SB4-220	SBX4-220
	1.8	6	SB6-220	SBX6-220
24.25-26.5	0.3	1	SB1-250	SBX1-250
	0.6	2	SC2-250	SCX2-250
	0.9	3	SC3-250	SCX3-250
	1.2	4	SB4-250	SBX4-250
27.5-29.5	0.3	1	SB1-280	SBX1-280
	0.6	2	SC2-280	SCX2-280
31-33.4	0.3	1	SB1-320	SBX1-320
	0.6	2	SC2-320	SCX2-320
37-40	0.3	1	SB1-380	SBX1-380
	0.6	2	SC2-380	SCX2-380
40.5-43.5	0.3	1	SB1-420	SBX1-420
	0.6	2	SC2-420	SCX2-420
51.2-52.6	0.3	1	SB1-520	NA

[1] Wideband model

[2] Planned for 1Q14

This table summarizes the main RFS CompactLine (SB) and CompactLine EASY (SC) antenna models.

Additional antenna variants and customized versions are also available.

For example, variants that support specific vendor's radios are available.

To confirm proper ordering models, please contact your RFS representative.

Performance specifications

Note: The specifications for the **SB1/SBX1** *(revision C) and* **SC2/SCX2** *(revision B) reflect the n*
Visit our on-line e-catalog dataXpress for the latest and most complete data specifications: **ww**

CITY OF PORTLAND, MAINE RESURGAM
Reviewed for Code Compliance
Inspections Division
Approved with Conditions
Date: 03/25/15

Frequency (GHz)	Polarization	Model Number	Diameter m (ft)	Gain (dBi) Low	Gain (dBi) Mid	Gain (dBi) High	3 dB-BW (deg)	VSWR/R L (dB)	X-Pol (dB)	IPI (dB)	F/B (dB)	ETSI RPE class	US FCC 101 Cat	Fine Adjust. Az	Fine Adjust. Elev				
5.925 to 7.125	Single	SC3-W60[3]	0.9 (3)	32.0	33.2	33.9	3.00	1.38 (16.0)	30		60	3	B2	±15	±1				
		SB4-W60	1.2 (4)	34.5	34.8	35.5	2.8	1.30 (17.7)	30		61	3	B2	±5	±1				
		SB6-W60	1.8 (6)	38.0	38.8	39.4	1.7	1.30 (17.7)	30		65	3	A	±5	±5				
	Dual	SCX3-W60[3]	0.9 (3)	32.0	33.2	33.9	3.00	1.38 (16.0)	30	35	60	3	B2	±15	±1				
		SBX4-W60	1.2 (4)	34.5	34.8	35.5	2.8	1.30 (17.7)	30	35	61	3	B2	±5	±1				
		SBX6-W60	1.8 (6)	38.0	38.8	39.4	1.7	1.30 (17.7)	30	35	65	3	A	±5	±5				
7.125 to 8.5	Single	SC2-W71	0.6 (2)	30.5	31.3	31.9	4.3	1.38 (16.0)	30		57	3		±15	±20	180	(112)	252	(155)
		SC3-W71	0.9 (3)	34.7	35.6	35.8	2.6	1.38 (16.0)	30		62	3		±15	±15	180	(112)	252	(155)
		SB4-W71	1.2 (4)	36.2	36.9	37.6	2.3	1.30 (17.7)	30		63	3		±5	±15	200	(125)	200	(125)
		SB6-W71	1.8 (6)	40.1	40.6	41.1	1.5	1.30 (17.7)	30		67	3		±5	±5	200	(125)	200	(125)
	Dual	SCX2-W71	0.6 (2)	30.5	31.3	31.9	4.3	1.38 (16.0)	30	35	57	3		±15	±20	180	(112)	252	(155)
		SCX3-W71	0.9 (3)	34.7	35.6	35.8	2.6	1.38 (16.0)	30	35	62	3		±15	±15	180	(112)	252	(155)
		SBX4-W71	1.2 (4)	36.2	36.9	37.6	2.3	1.30 (17.7)	30	35	63	3		±5	±15	200	(125)	200	(125)
		SBX6-W71	1.8 (6)	40.1	40.6	41.1	1.5	1.30 (17.7)	30	35	67	3		±5	±5	200	(125)	200	(125)
10 to 11.7	Single	SC2-W100	0.6 (2)	33.8	34.5	35.2	3.2	1.38 (16.0)	30		61	3	A/B[1]	±15	±20	180	(112)	252	(155)
		SC3-W100	0.9 (3)	37.6	38.3	39.1	2.0	1.38 (16.0)	30		64	3	A	±15	±15	180	(112)	252	(155)
		SB4-W100	1.2 (4)	39.4	39.9	40.3	1.5	1.30 (17.7)	30		66	3	A	±5	±15	200	(125)	200	(125)
		SB6-W100	1.8 (6)	42.7	43.4	43.9	1.0	1.30 (17.7)	30		70	3	A	±5	±5	200	(125)	200	(125)
	Dual	SCX2-W100	0.6 (2)	33.8	34.5	35.2	3.2	1.38 (16.0)	30	35	61	3	A/B[1]	±15	±20	180	(112)	252	(155)
		SCX3-W100	0.9 (3)	37.6	38.3	39.1	2.0	1.38 (16.0)	30	35	64	3	A	±15	±15	180	(112)	252	(155)
		SBX4-W100	1.2 (4)	39.4	39.9	40.3	1.5	1.30 (17.7)	30	35	66	3	A	±5	±15	200	(125)	200	(125)
		SBX6-W100	1.8 (6)	42.7	43.4	43.9	1.0	1.30 (17.7)	30	35	70	3	A	±5	±5	200	(125)	200	(125)
12.7 to 13.25	Single	SB1-127	0.3 (1)	31.2	31.5	31.8	4.5	1.38 (16.0)	30		57	3		±15	±20	252	(155)	320	(198)
		SC2-127	0.6 (2)	35.8	36.0	36.2	2.7	1.38 (16.0)	30		62	3		±15	±20	180	(112)	252	(155)
		SC3-127	0.9 (3)	39.9	40.0	40.1	1.6	1.38 (16.0)	30		66	3	A	±15	±15	180	(112)	252	(155)
		SB4-127	1.2 (4)	41.7	41.9	42.1	1.3	1.30 (17.7)	30		68	3	A	±5	±15	200	(125)	200	(125)
		SB6-127	1.8 (6)	45.1	45.4	45.7	0.9	1.30 (17.7)	30		72	3	A	±5	±5	200	(125)	200	(125)
	Dual	SBX1-127	0.3 (1)	31.2	31.5	31.8	4.5	1.38 (16.0)	30	35	57	3		±15	±20	252	(155)	320	(198)
		SCX2-127	0.6 (2)	35.8	36.0	36.2	2.7	1.38 (16.0)	30	35	62	3		±15	±20	180	(112)	252	(155)
		SCX3-127	0.9 (3)	39.9	40.0	40.1	1.6	1.38 (16.0)	30	35	66	3	A	±15	±15	180	(112)	252	(155)
		SBX4-127	1.2 (4)	41.7	41.9	42.1	1.3	1.30 (17.7)	30	35	68	3	A	±5	±15	200	(125)	200	(125)
		SBX6-127	1.8 (6)	45.1	45.4	45.7	0.9	1.30 (17.7)	30	35	72	3	A	±5	±5	200	(125)	200	(125)
14.2 to 15.35	Single	SB1-142	0.3 (1)	32.0	32.1	32.2	4.2	1.30 (17.7)	30		55	2		±15	±20	252	(155)	320	(198)
		SC2-142	0.6 (2)	36.7	37.1	37.3	2.3	1.38 (16.0)	30		65	3		±15	±20	180	(112)	252	(155)
		SC3-142	0.9 (3)	40.6	41.0	41.3	1.5	1.38 (16.0)	30		69	3		±15	±15	180	(112)	252	(155)
		SB4-142	1.2 (4)	42.7	42.9	43.1	1.1	1.30 (17.7)	30		72	3		±5	±15	200	(125)	200	(125)
		SB6-142	1.8 (6)	45.9	46.2	46.5	0.8	1.30 (17.7)	30		74	3		±5	±5	200	(125)	200	(125)
	Dual	SBX1-142	0.3 (1)	32.0	32.1	32.2	4.2	1.30 (17.7)	30	35	55	2		±15	±20	252	(155)	320	(198)
		SCX2-142	0.6 (2)	36.7	37.1	37.3	2.3	1.38 (16.0)	30	35	65	3		±15	±20	180	(112)	252	(155)
		SCX3-142	0.9 (3)	40.6	41.0	41.3	1.5	1.38 (16.0)	30	35	69	3		±15	±15	180	(112)	252	(155)
		SBX4-142	1.2 (4)	42.7	42.9	43.1	1.1	1.30 (17.7)	30	35	72	3		±5	±15	200	(125)	200	(125)
		SBX6-142	1.8 (6)	45.9	46.2	46.5	0.8	1.30 (17.7)	30	35	74	3		±5	±5	200	(125)	200	(125)
17.7 to 19.7	Single	SB1-190	0.3 (1)	33.8	34.2	35.2	3.4	1.30 (17.7)	30		56	2	B2	±15	±20	252	(155)	320	(198)
		SC2-190	0.6 (2)	38.5	39.0	39.5	1.8	1.38 (16.0)	30		68	3	A	±15	±20	180	(112)	252	(155)
		SC3-190	0.9 (3)	42.8	43.3	43.8	1.1	1.38 (16.0)	30		71	3	A	±15	±15	164	(102)	252	(155)
		SB4-190	1.2 (4)	44.2	44.7	45.2	1.0	1.30 (17.7)	30		72	3	A	±5	±15	200	(125)	200	(125)
		SB6-190	1.8 (6)	47.6	48.2	48.8	0.7	1.30 (17.7)	30		76	3	A	±5	±5	200	(125)	200	(125)
	Dual	SBX1-190	0.3 (1)	33.8	34.2	35.2	3.4	1.30 (17.7)	30	35	56	2	B2	±15	±20	252	(155)	320	(198)
		SCX2-190	0.6 (2)	38.5	39.0	39.5	1.8	1.38 (16.0)	30	35	68	3	A	±15	±20	180	(112)	252	(155)
		SCX3-190	0.9 (3)	42.8	43.3	43.8	1.1	1.38 (16.0)	30	35	71	3	A	±15	±15	164	(102)	252	(155)
		SBX4-190	1.2 (4)	44.2	44.7	45.2	1.0	1.30 (17.7)	30	35	72	3	A	±5	±15	200	(125)	200	(125)
		SBX6-190	1.8 (6)	47.6	48.2	48.8	0.7	1.30 (17.7)	30	35	76	3	A	±5	±5	200	(125)	200	(125)
21.2 to 23.6	Single	SB1-220	0.3 (1)	35.5	35.8	36.2	2.7	1.30 (17.7)	30		61	3	A	±15	±20	252	(155)	320	(198)
		SC2-220	0.6 (2)	40.5	41.0	41.5	1.5	1.29 (18.0)	30		66	3	A	±15	±20	180	(112)	252	(155)
		SC3-220	0.9 (3)	44.1	44.8	45.0	1.0	1.29 (18.0)	30		71	3	A	±15	±15	140	(87)	252	(155)
		SB4-220	1.2 (4)	45.5	46.1	46.6	0.8	1.30 (17.7)	30		74	3	A	±5	±15	200	(125)	200	(125)
		SB6-220	1.8 (6)	49.3	50.0	50.5	0.5	1.30 (17.7)	30		75	3	A	±5	±5	200	(125)	200	(125)
	Dual	SBX1-220	0.3 (1)	35.5	35.8	36.2	2.7	1.30 (17.7)	30	35	61	3	A	±15	±20	252	(155)	320	(198)
		SCX2-220	0.6 (2)	40.5	41.0	41.5	1.5	1.29 (18.0)	30	35	66	3	A	±15	±20	180	(112)	252	(155)
		SCX3-220	0.9 (3)	44.1	44.8	45.0	1.0	1.29 (18.0)	30	35	71	3	A	±15	±15	140	(87)	252	(155)
		SBX4-220	1.2 (4)	45.5	46.1	46.6	0.8	1.30 (17.7)	30	35	74	3	A	±5	±15	200	(125)	200	(125)
		SBX6-220	1.8 (6)	49.3	50.0	50.5	0.5	1.30 (17.7)	30	35	75	3	A	±5	±5	200	(125)	200	(125)
24.25 to 26.5	Single	SB1-250	0.3 (1)	36.3	36.6	37.0	2.4	1.30 (17.7)	30		62	3		±15	±20	252	(155)	320	(198)
		SC2-250	0.6 (2)	41.7	42.3	42.5	1.4	1.29 (18.0)	30		68	3	A	±15	±20	180	(112)	252	(155)
		SC3-250	0.9 (3)	45.6	46.1	46.5	0.8	1.29 (18.0)	30		73	3	A	±15	±15	140	(87)	252	(155)
		SB4-250	1.2 (4)	46.8	47.2	47.6	0.7	1.30 (17.7)	30		73	3	A	±5	±15	200	(125)	200	(125)
	Dual	SBX1-250	0.3 (1)	36.3	36.6	37.0	2.4	1.30 (17.7)	30	35	62	3		±15	±20	252	(155)	320	(198)
		SCX2-250	0.6 (2)	41.7	42.3	42.5	1.4	1.29 (18.0)	30	35	68	3	A	±15	±20	180	(112)	252	(155)
		SCX3-250	0.9 (3)	45.6	46.1	46.5	0.8	1.29 (18.0)	30	35	73	3	A	±15	±15	140	(87)	252	(155)
		SBX4-250	1.2 (4)	46.8	47.2	47.6	0.7	1.30 (17.7)	30	35	73	3	A	±5	±15	200	(125)	200	(125)

Alcatel

RESURGAM. CITY OF PORTLAND, MAINE
Reviewed for Code Compliance
Inspections Division
Approved with Conditions
Date: 03/25/15

Alcatel-Lucent RRH2x40-07-U

REMOTE RADIO HEAD

The Alcatel-Lucent RRH2x40-07-U is a high-power, small form-factor Remote Radio Head (RRH) operating in the North American Digital Dividend / 700MHz frequency band (3GPP Band 13). The Alcatel-Lucent RRH2x40-07-U is designed with an eco-efficient approach, providing operators with the means to achieve high quality and capacity coverage with minimum site requirements.

A distributed eNodeB expands deployment options by using two components, a Base Band Unit (BBU) containing the digital assets and a separate RRH containing the radio-frequency (RF) elements. This modular design optimizes available space and allows the main components of an eNodeB to be installed separately, within the same site or several kilometres apart.

The Alcatel-Lucent RRH2x40-07-U is linked to the BBU by an optical-fiber connection carrying downlink and uplink digital radio signals along with operations, administration and maintenance (OA&M) information. The Alcatel-Lucent RRH2x40-07-U has two transmit RF paths, 40 W RF output power per transmit path, and is designed to manage up to two-way receive diversity. The device is ideally suited to support macro coverage, with multiple-input multiple-output (MIMO) 2x2 operation in up to 10 MHz of bandwidth.

The Alcatel-Lucent RRH2x40-07-U is designed to make available all the benefits of a distributed eNodeB, with excellent RF characteristics, with low capital expenditures (CAPEX) and low operating expenditures (OPEX). The limited space available in some sites may prevent the installation of traditional single-cabinet BTS equipment or require costly cranes to be employed, leaving coverage holes. However, many of these sites can host an Alcatel-Lucent RRH2x40-07-U installation, providing more flexible site selection and improved network quality along with greatly reduced installation time and costs.

Fast, low-cost installation and deployment

The Alcatel-Lucent RRH2x40-07-U is a zero-footprint solution and operates noise-free, simplifying negotiations with site property owners and minimizing environmental impacts. Installation can easily be done by a single person because the Alcatel-Lucent RRH2x40-07-U is compact and weights less than 23 kg (50 lb), eliminating the need for a crane to hoist the BTS cabinet to the rooftop. A site can be in operation in less than one day — a fraction of the time required for a traditional BTS.

RESURGAM. CITY OF PORTLAND, MAINE
Reviewed for Code Compliance
Inspections Division
Approved with Conditions
Date: 03/25/15

Excellent RF performance

Because of its small size and weight, the Alcatel-Lucent RRH2x40-07-U can be installed close to the antenna. Operators can therefore locate the Alcatel-Lucent RRH2x40-07-U where RF engineering is deemed ideal, minimizing trade-offs between available sites and RF optimum sites. The RF feeder cost and installation costs are reduced or eliminated, and there is no need for a Tower Mounted Amplifier (TMA) because losses introduced by the RF feeder are greatly reduced. The Alcatel-Lucent RRH2x40-07-U provides more RF power while at the same time consuming less electricity.

Features

- Zero-footprint deployment
- Easy installation, with a lightweight unit can be carried and set up by one person
- Optimized RF power, with flexible site selection and elimination of a TMA
- Convection-cooled (fanless), noise-free, and heaterless unit
- Best-in-class power efficiency, with significantly reduced energy consumption

Benefits

- Leverages e: lower site cc
- Reduces inst fewer instal simplified lo
- Decreases power costs and minimizes environmental impacts, with the potential for eco-sustainable power options
- Improves RF performance and adds flexibility to network planning

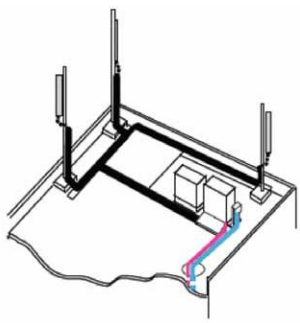

Macro

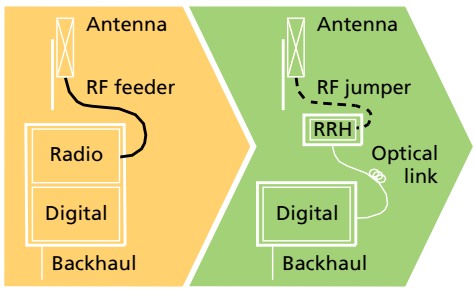

RRH for space-constrained cell sites

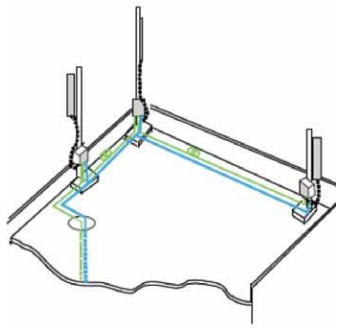

Distributed

Technical specifications

Physical dimensions

- Height: 390 mm (15.4 in.)
- Width: 380 mm (15 in.)
- Depth: 210 mm (8.2 in.)
- Weight (without mounting kit): less than 23 kg (50 lb)

Power

- Power supply: -48V

Operating environment

- Outdoor temperature range:
  - ¬ With solar load: -40°C to +50°C (-40°F to +122°F)
  - ¬ Without solar load: -40°C to +55°C (-40°F to +131°F)
- Passive convection cooling (no fans)
- Enclosure protection
  - ¬ IP65 (International Protection rating)

RF characteristics

- Frequency band: 700 MHz; 3GPP Band 13
- Bandwidth: up to 10 MHz
- RF output power at antenna port:
  - ¬ 40 W nominal RF power for each Tx port
- Rx diversity: 2-way or 4-way
- Noise figure: below 2.5 dB typical
- ALD features
  - ¬ TMA
  - ¬ Remote electrical tilt (RET) support (AISG v2.0)

Optical characteristics

Type/number of fibers

- Up to 3.12 Gb/s line bit rate
- Single-mode variant
  - ¬ One SM fiber (9/125 µm) per RRH2x, carrying UL and DL using CWDM (at 1550/1310 nm)
- Multi-mode variant
  - ¬ Two MM fibers (50/125 µm) per RRH2x: one carrying UL, the other carrying DL (at 850 nm)

Optical fiber length

- Up to 500 m (0.31 mi), using MM fiber
- Up to 20 km (12.43 mi), using SM fiber

Alarms and ports

- Six external alarms
- Two optical ports to support daisy-chaining

www.alcatel-lucent.com Alcatel, Lucent, Alcatel-Lucent and the Alcatel-Lucent logo are trademarks of Alcatel-Lucent. All other trademarks are the property of their respective owners. The information presented is subject to change without notice. Alcatel-Lucent assumes no responsibility for inaccuracies contained herein. Copyright © 2010 Alcatel-Lucent. All rights reserved.
CPG2809100913 (09)

Alcatel·Lucent

ITEM	PART NUMBER	DESCRIPTION	QTY.	WEIGHT
1	MT-XXX	HORIZONTAL PIPE	3	SEE TABLE
2	MT-XXX	VERTICAL PIPE	3	SEE TABLE
3	SFTPHK	HARDWARE KIT (ITEM# 4-11)	1	
4	XA-2020	CROSS OVER ANGLE KIT	3	4.08 LBS
5	SA-B	STIFF ARM BRACKET	1	59.68 LBS
6	ADM	CROSSOVER PLATE 12" X 8"	2	9.83 LBS
7	DCP10	SMALL CLAMP HALF	8	2.21 LBS
8	MT-381-8	5/8" X 8" GALV THREADED ROD	16	0.64 LBS
9	GWF05A	5/8" GALV FLAT WASHER (A325)	32	0.03 LBS
10	GN05A	5/8" GALV HEX NUT (A325)	32	0.08 LBS
11	GWL-05	5/8" GALV LOCK WASHER	32	0.01 LBS

PART #	TOTAL WEIGHT	HORIZONTAL PIPE	WEIGHT	VERTICAL PIPE	WEIGHT
SF-TP10-3-72	303.03 LBS	MT-537	39.70 LBS	MT-651	21.00 LBS
SF-TP10-3-96	325.02 LBS	MT-537	39.70 LBS	MT-651-96	33.50 LBS
SF-TP10-3-126	351.98 LBS	MT-537	39.70 LBS	MT-537	39.70 LBS
SF-TP12-3-72	318.05 LBS	MT-651-150	46.30 LBS	MT-651	21.00 LBS
SF-TP12-3-96	340.05 LBS	MT-651-150	46.30 LBS	MT-651-96	33.50 LBS
SF-TP12-3-126	367.01 LBS	MT-651-150	46.30 LBS	MT-537	39.70 LBS

REV.	ZONE	
A		
B		

	BY	DATE
	AW	06/26/06
	ACG	08/15/06

RESURGAM CITY OF PORTLAND, MAINE

Reviewed for Code Compliance
Inspections Division
Approved with Conditions

Date: 03/25/15

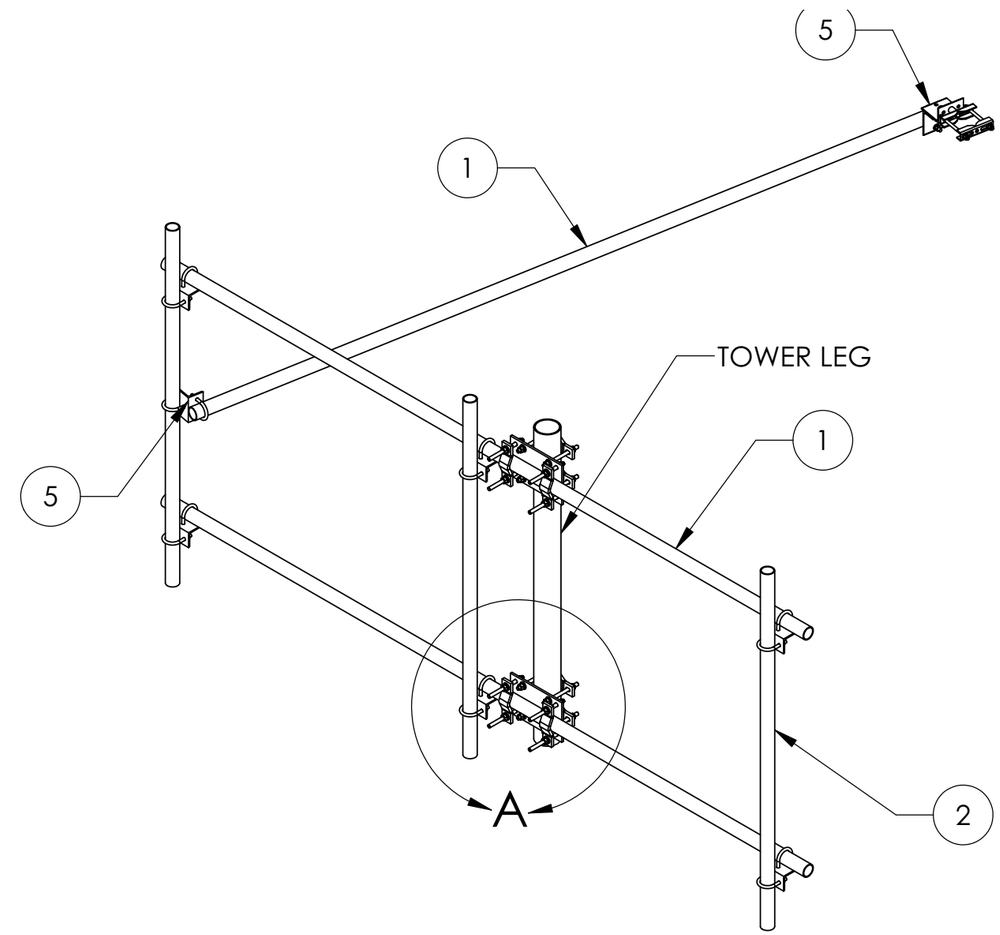

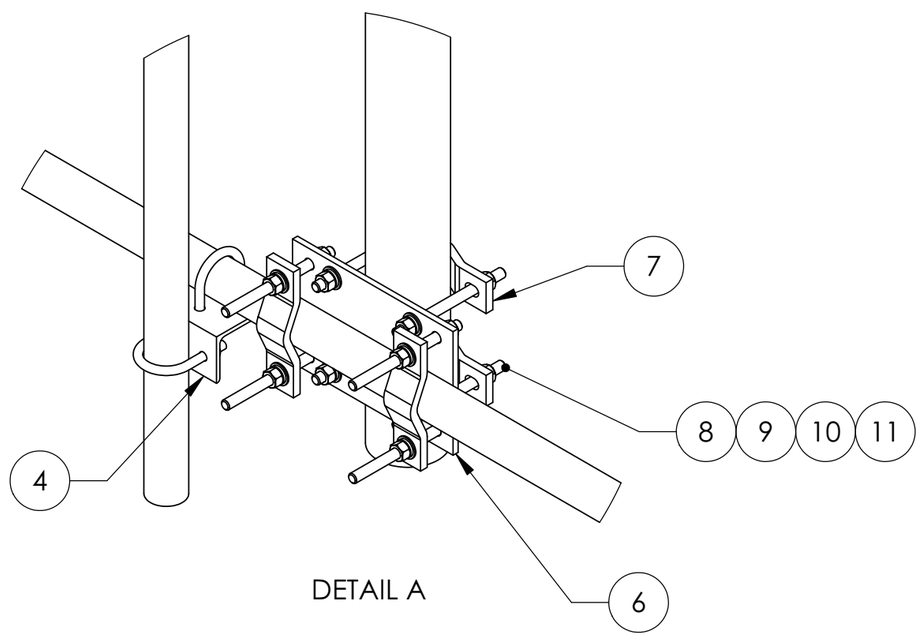

DETAIL A

These drawings and specifications are the proprietary property of ANDREW CORPORATION and may be used only for the specific purpose authorized in writing by Andrew Corporation.

ALL DIMENSIONS ARE IN INCHES U.O.S.
TOLERANCES UNLESS OTHERWISE SPECIFIED:

.X = ± .06 ANGLES ± 2°
.XX = ± .03 FRACTIONS ± 1/32
.XXX= ± .010

REMOVE BURRS AND BREAK EDGES .005

DO NOT SCALE THIS PRINT

DRAWN BY: AW	SHEET: 1 of 1	PART NUMBER: SF-TP SERIES
CHECKED BY: TP	SCALE: NTS	DESCRIPTION: TOWER PIPE FRAME
DATE: 06/26/06	MATERIAL: A36	DRAWING TYPE: ASSEMBLY DRAWING
REVISION: B	FINISH: GALV A123	ANDREW® ORLAND PARK, IL. 60462 U.S.A.
	WEIGHT: SEE TABLE	

Product Data Sheet | **APXVRR13-C-A20**

Optimizer® Side-by-Side Dual Polarized Antenna, 1710-2200, 65deg, 18.0dBi, 1.3m, VET, 0

CITY OF PORTLAND, MAINE
RESURGAM
Reviewed for Code Compliance
Inspections Division
Approved with Conditions
Date: 03/25/15

Product Description

A combination of two X-Polarized antennas in a single radome, the RFS Quad-Pol antennas are designed for applications requiring a minimum number of antennas at a cell site and reduced tower loading. They offer the rugged construction of our new H Series of high band antennas that feature both high RF performance and energy efficiency. They are ideal for GSM1800, PCS, UMTS and Mobile TV networks where high gain is required. These antennas are especially well suited for MIMO applications. The antenna comes pre-connected with two antenna control units (ACU).

Features/Benefits

- **Two x-polarized broadband panels in a single radome – reduced tower loading**
- **Rugged construction – high reliability**
- **Superior gain tracking – difference between UL and DL <1dB**
- **Stable azimuth horizontal beamwidth – difference <6deg between UL and DL**
- **Low PIM – no system down-time, high call quality and reduced number of dropped calls**
- **Excellent upper sidelobe suppression – allows strong mechanical tilt**
- **High gain – provides better coverage**
- **Wideband frequency performance – enables future growth and increases flexibility**
- **High front-to-back ratio**
- **Includes (2) AISG 2.0 Compatible ACU-A20-N or ACU-A20-S antenna control units.**

Technical Specifications

Electrical Specifications

Frequency Range, MHz	1710-1880	1850-1990	1900-2200
Horizontal Beamwidth, deg	68	67	65
Vertical Beamwidth, deg	7.4	7	6.5
Electrical Downtilt Range, deg		0-10	
Gain, dBi (dBd)	17.2 (15.1)	17.5 (15.4)	18.0 (15.9)
Upper Sidelobe Suppression, dB		> 18 (typically > 20)	
Front-To-Back Ratio, dB		Typically 30	
Polarization		Dual pol +/-45°	
VSWR		< 1.5:1, < 1.4:1, < 1.4:1	
Isolation between Ports, dB		> 30	
Isolation Between Bands, dB		> 30	
3rd Order IMP @ 2 x 43 dBm, dBc		≥153	
7th Order IMP @ 2 x 38 dBm, dBc		N/A, N/A, >170	
Impedance, Ohms		50	
Maximum Power Input, W		300	
Lightning Protection		Direct Ground	
Connector Type/Location		(4) 7-16 Long Neck Female/Bottom	

Mechanical Specifications

Dimensions - HxWxD, mm (in)	1391 x 350 x 110 (54.8 x 13.8 x 4.3)
Weight w/o Mtg Hardware, kg (lb)	14.5 (32.0)
Survival/Rated Wind Speed, km/h (mph)	200 (125) / 160 (100)
Wind Load @ Rated Wind, Front, N (lbf)	640 (143.9)
Wind Load @ Rated Wind, Max., N (lbf)	640 (143.9)
Wind Load @ Rated Wind, Side, N (lbf)	147 (33.0)
Wind Load @ Rated Wind, Rear, N (lbf)	491 (110.4)
Operation temperature, °C (°F)	-40 to +60 (-40 to +140)
Radome Material/Color	PVC/Light Grey RAL7035
Mounting Hardware Material	Diecasted Aluminum and Stainless Steel
Radiating Element Material	Aluminum
Reflector Material	Aluminum
Shipping Weight, kg (lb)	22.5 (49.6)
Packing Dimensions, HxWxD, mm (in)	1492 x 435 x 243 (58.7 x 17.1 x 9.6)

Ordering Information

Mounting Hardware	APM40-2
Mounting Pipe Diameter, mm (in)	60-120 (2.36-4.72)
Mounting Hardware Weight, kg (lb)	3.4 (7.5)

All information contained in the present datasheet is subject to confirmation at time of ordering

14374 Diamond Island Tower
Photographs taken by Aaron Wilson, P.E.

RESURGAM CITY OF PORTLAND, MAINE
Reviewed for Code Compliance
Inspections Division
Approved with Conditions
Date: 03/25/15

14374 01 11/18/2014 3:23:58 PM

14374 02 11/18/2014 8:47:36 AM

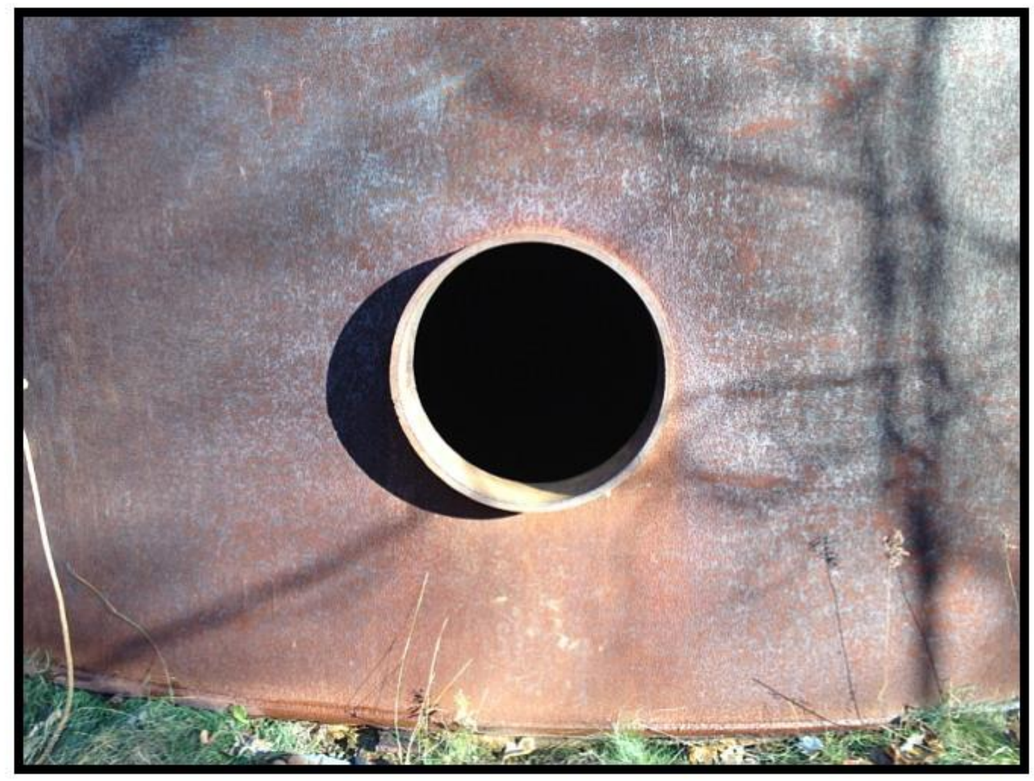

14374 03 11/18/2014 8:47:42 AM

14374 04 11/18/2014 8:47:46 AM

14374 05 11/18/2014 8:47:54 AM

14374 06 11/18/2014 8:47:59 AM

ASSOCIATED DESIGN PARTNERS, INC.

14374 Diamond Island Tower
Photographs taken by Aaron Wilson, P.E.

Reviewed for Code Compliance
Inspections Division
Approved with Conditions
Date: 03/25/15

14374 07 11/18/2014 8:48:08 AM

14374 08 11/18/2014 8:48:13 AM

14374 09 11/18/2014 8:48:20 AM

14374 10 11/18/2014 8:48:24 AM

14374 11 11/18/2014 8:48:32 AM

14374 12 11/18/2014 8:48:37 AM

ASSOCIATED DESIGN PARTNERS, INC.

14374 Diamond Island Tower
Photographs taken by Aaron Wilson, P.E.

Reviewed for Code Compliance
Inspections Division
Approved with Conditions

Date: 03/25/15

14374 13 11/18/2014 8:48:45 AM

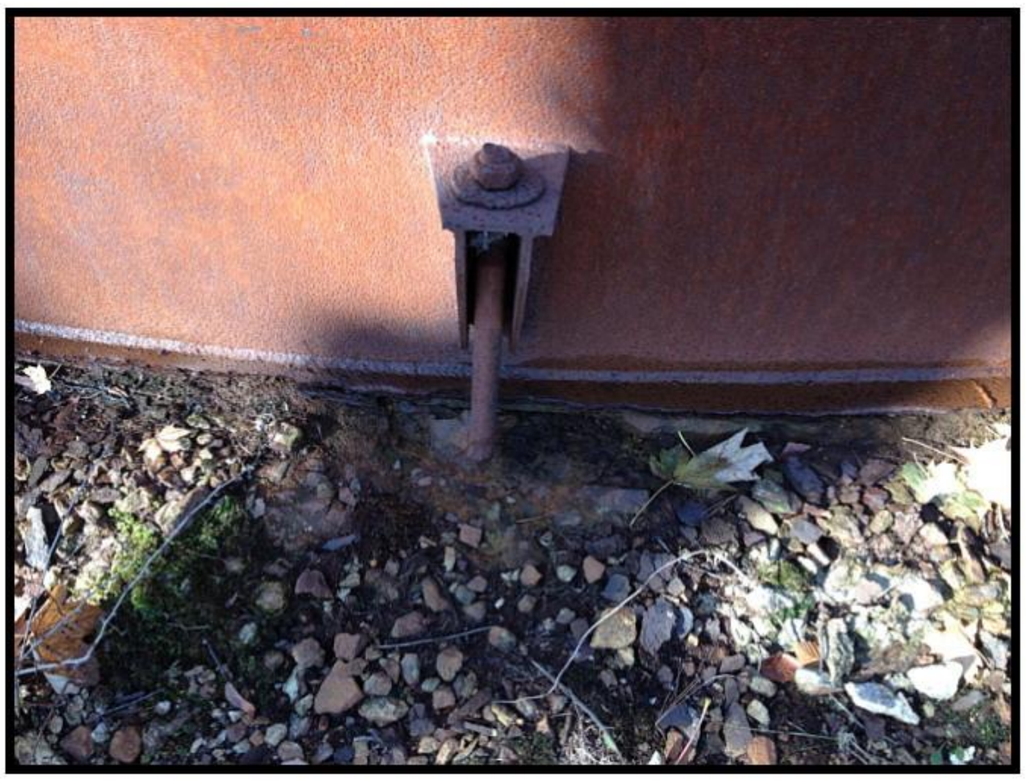

14374 14 11/18/2014 8:48:51 AM

14374 15 11/18/2014 8:49:00 AM

14374 16 11/18/2014 8:49:06 AM

14374 17 11/18/2014 8:49:13 AM

14374 18 11/18/2014 8:49:19 AM

ASSOCIATED DESIGN PARTNERS, INC.

14374 Diamond Island Tower
Photographs taken by Aaron Wilson, P.E.

Reviewed for Code Compliance
Inspections Division
Approved with Conditions
Date: 03/25/15

14374 19 11/18/2014 8:49:22 AM

14374 20 11/18/2014 8:49:29 AM

14374 21 11/18/2014 8:49:37 AM

14374 22 11/18/2014 3:26:23 PM

14374 23 11/18/2014 8:50:08 AM

14374 24 11/18/2014 8:50:20 AM

ASSOCIATED DESIGN PARTNERS, INC.

14374 Diamond Island Tower
Photographs taken by Aaron Wilson, P.E.

Reviewed for Code Compliance
Inspections Division
Approved with Conditions
Date: 03/25/15

14374 25 11/18/2014 8:50:26 AM

14374 26 11/18/2014 8:50:30 AM

14374 27 11/18/2014 8:50:32 AM

14374 28 11/18/2014 8:50:40 AM

14374 29 11/18/2014 8:50:46 AM

14374 30 11/18/2014 3:26:34 PM

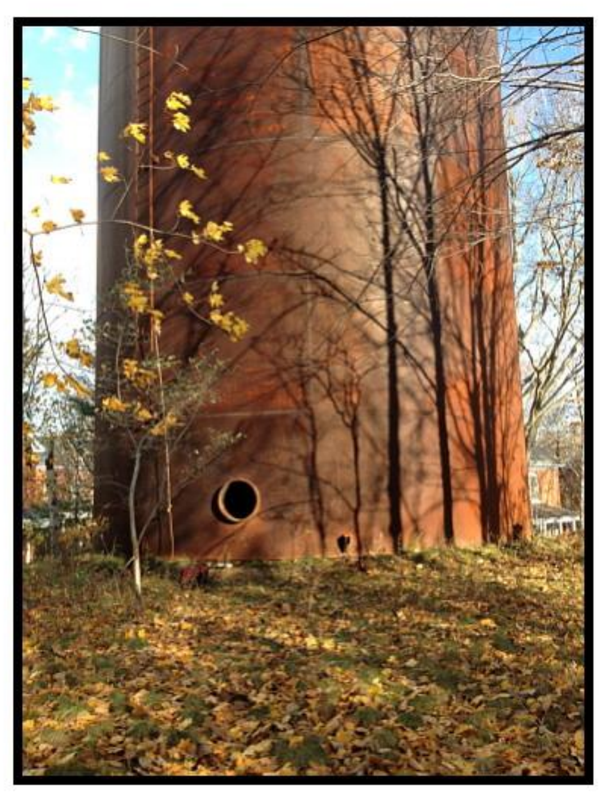

ASSOCIATED DESIGN PARTNERS, INC.

14374 Diamond Island Tower
Photographs taken by Aaron Wilson, P.E.

Reviewed for Code Compliance
Inspections Division
Approved with Conditions
Date: 03/25/15

14374 31 11/18/2014 4:24:22 PM

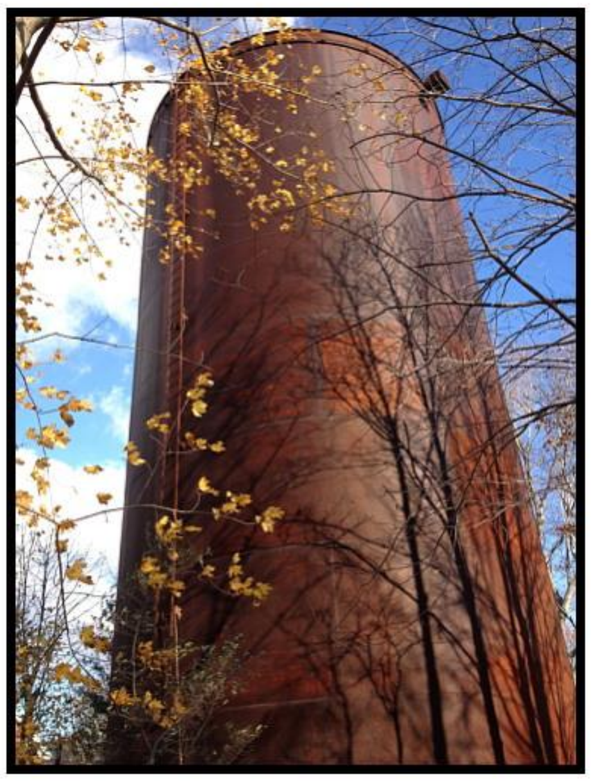

14374 32 11/18/2014 8:55:02 AM

14374 33 11/18/2014 8:55:03 AM

14374 34 11/18/2014 8:55:15 AM

14374 35 11/18/2014 8:55:31 AM

14374 36 11/18/2014 8:55:57 AM

ASSOCIATED DESIGN PARTNERS, INC.

14374 Diamond Island Tower
Photographs taken by Aaron Wilson, P.E.

Reviewed for Code Compliance
Inspections Division
Approved with Conditions
Date: 03/25/15

14374 37 11/18/2014 8:56:10 AM

14374 38 11/18/2014 8:56:20 AM

ASSOCIATED DESIGN PARTNERS, INC.