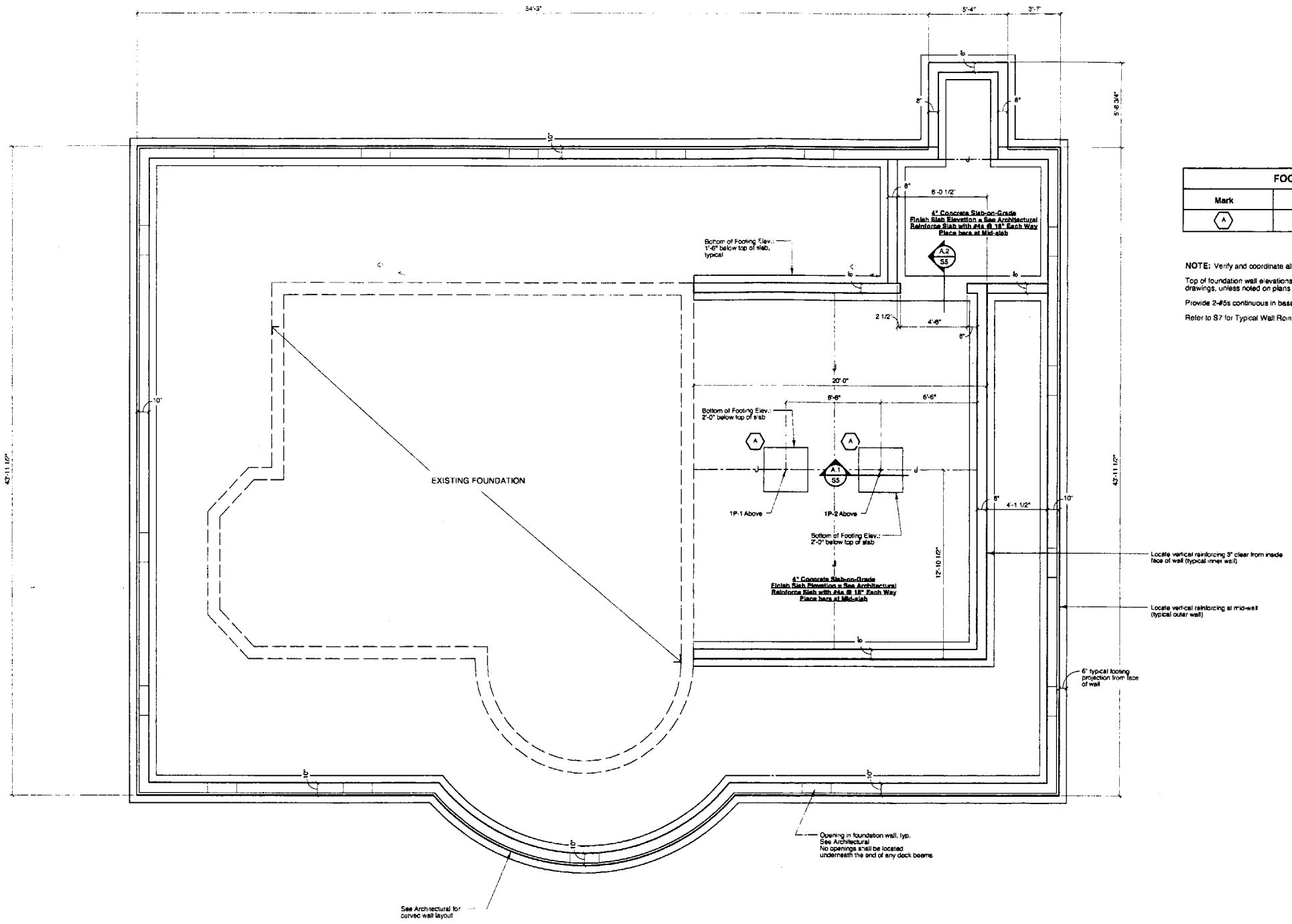

FOOTING SCHEDULE		
Mark	Size	Reinforcing
A	3'-0" x 3'-0" x 1'-0"	4- #4s each way, bottom (3" clear)

NOTE: Verify and coordinate all dimensions with Architectural drawings, typ.

Top of foundation wall elevations to be verified and coordinated with Architectural drawings, unless noted on plans

Provide 2-#5s continuous in base of new wall footings, typical.

Refer to S7 for Typical Wall Reinforcing.

44x54.25 = 2387
5.75 x 43.3 = 249
2411.5

DEPT. OF BUILDING INSPECTION
CITY OF PORTLAND, ME
MAR 3 1 2006
RECEIVED

© 2005 Michael R. Charek, Architect

Michael R. Charek Architect
25 Hartley Street
Portland, Maine 04103
(207) 761-0556

Structural Consultants:
SWIFT ENGINEERING
Consulting Structural Engineers
313 Main Street, Gorham, Maine 04038
Phone 207-767-1486 Fax 207-767-1835
www.swiftengineering.com

STATE OF MAINE
EDWARD J. CUNDY
#7382
REGISTERED PROFESSIONAL ENGINEER

Morgan Residence
Renovation & Addition

140 Noyes Street
Portland, Maine

Title
FOUNDATION PLAN

Scale: 1/4" = 1'-0"

Date: 10/28/05

Revisions

Sheet
S0

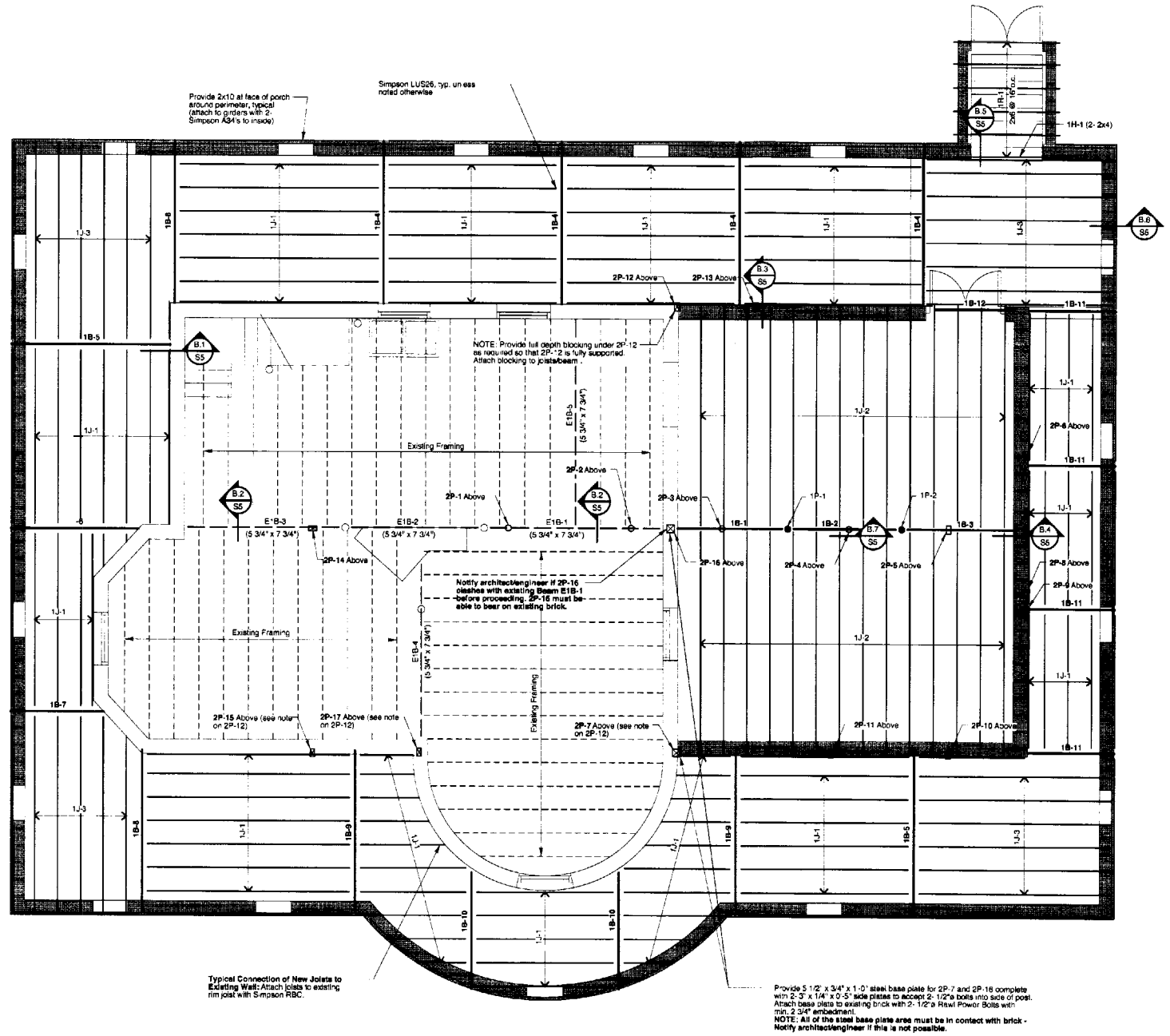

POST SCHEDULE FOR FIRST FLOOR FRAMING			
MARK	SIZE	POST CAP	POST BASE
1P-1	3"ø Std Pipe	Simpson LCC5.25-3.5	See Foundation Plan
1P-2	3"ø Std Pipe	Simpson LCC5.25-3.5	See Foundation Plan

BEAM SCHEDULE FOR 1ST FLR FRAMING	
MARK	SIZE
1B-1	5 1/4 x 11 1/4 LVL
1B-2	5 1/4 x 11 1/4 LVL
1B-3	5 1/4 x 11 1/4 LVL
1B-4	2- 2x10 SP#1, PT
1B-5	2- 2x10 SP#1, PT
1B-6	2- 2x10 PT
1B-7	2- 2x10 PT
1B-8	2- 2x10 PT
1B-9	2- 2x10 PT
1B-10	2- 2x10 PT
1B-11	2- 2x10 PT
1B-12	3- 2x10 PT

JOIST SCHEDULE FOR 1ST FLR FRAMING		
MARK	SIZE	SPACING
1J-1	2x8	16"o.c.
1J-2	2x10	16"o.c.
1J-3	2x10	16"o.c.

DRAWING LEGEND

- - - - - - Existing joists

— — — Existing beams (wood or steel)

MEMBER DESIGNATION KEY

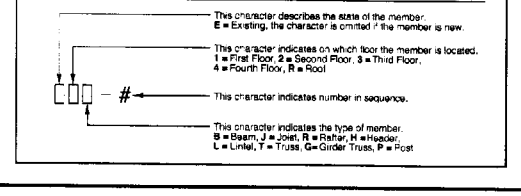

© 2005 Michael R. Charek, Architect

Structural Consultants:
SWIFT ENGINEERING
Consulting Structural Engineers
Phone: 207.761.0556 Fax: 207.761.0558
www.swiftengineering.com

Michael R. Charek
Architect
25 Hartley Street
Portland, Maine 04103
(207) 761-0556

Morgan Residence
Renovation & Addition
140 Noyes Street
Portland, Maine

Title
FIRST FLOOR FRAMING PLAN

Scale: 1/4" = 1'-0"

Date: 10/28/05

Revisions

Sheet
S1

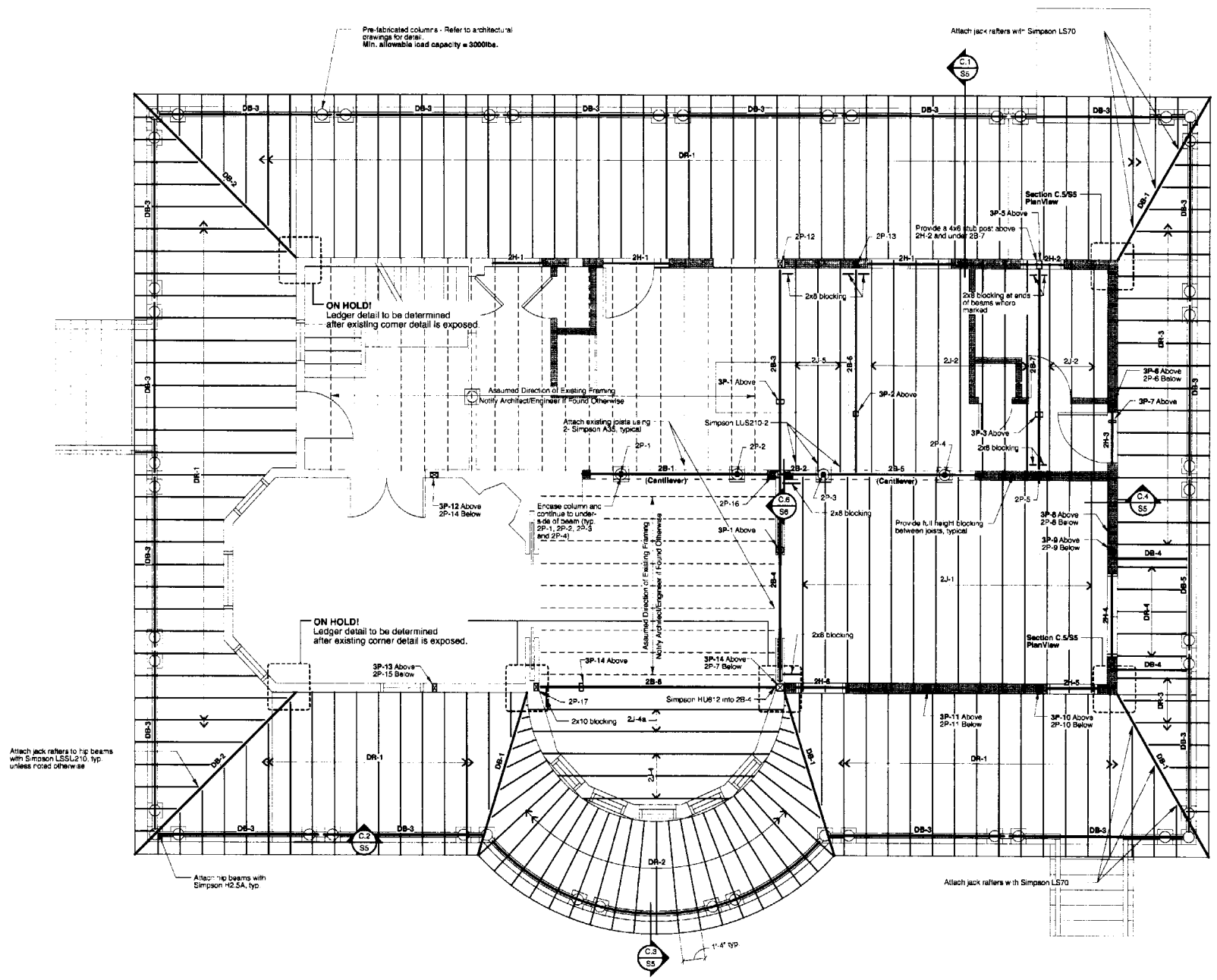

POST SCHEDULE FOR SECOND FLOOR FRAMING			
MARK	SIZE	POST CAP	POST BASE
2P-1	3"ø Stnd Pipe	Simpson LCC5.25-3.5	See Section B.7/S5
2P-2	3"ø Stnd Pipe	Simpson LCC5.25-3.5	See Section B.7/S5
2P-3	3"ø Stnd Pipe	Simpson LCC5.25-3.5	See Section B.7/S5
2P-4	3"ø Stnd Pipe	Simpson LCC5.25-3.5	See Section B.7/S5
2P-5	2- 2x6	Toenail to 2B-7	Toenail to plate
2P-6	3 1/2 x 5 1/4 LVL	Toenail to plate	Toenail to plate
2P-7	5 1/4 x 5 1/4 LVL	Toenail to 2B-4	See Note on Drawing S1
2P-8	2x6	Toenail to plate	Toenail to plate
2P-9	3 1/2 x 5 1/4 LVL	Simpson BC40	Simpson BC40
2P-10	4x6	Toenail to plate	Toenail to plate
2P-11	4x6	Toenail to plate	Toenail to plate
2P-12	2- 2x6	Toenail to 2B-3	Toenail to plate
2P-13	2- 2x6	Toenail to 2B-8	Toenail to plate
2P-14	4x6*	Toenail to plate	Toenail to plate
2P-15	2- 2x6	Toenail to plate	Toenail to plate
2P-16	5 1/4" x 5 1/4" LVL	Toenail to 2B-2	See Note on Drawing S1
2P-17	2- 2x6	Simpson BC40 (shim as required)	Toenail to plate

* = Wide face parallel with wall.

BEAM SCHEDULE FOR 2ND FLR FRAMING	
MARK	SIZE
2B-1	3- 2x10
2B-2	5 1/4 x 9 1/2 LVL
2B-3	5 1/4 x 11 1/4 LVL
2B-4	5 1/4 x 14 LVL
2B-5	5 1/4 x 9 1/2 LVL
2B-6	5 1/4 x 9 1/4 LVL
2B-7	3 1/2 x 9 1/4 LVL
2B-8	5 1/4 x 11 1/4 LVL

BEAM SCHEDULE FOR DECK ROOF	
MARK	SIZE
DB-1	2- 2x8
DB-2	3 1/2 x 7 1/4 LVL
DB-3	2- 2x12
DB-4	2- 2x8
DB-5	2- 2x12
DB-6	2- 2x12

JOIST SCHEDULE FOR 2ND FLR FRAMING		
MARK	SIZE	SPACING
2J-1	2x10	16"o.c.
2J-2	2x10	16"o.c.
2J-3	Not Used	*6"o.c.
2J-4	2x10	*6"o.c.
2J-4a	2- 2x10	*6"o.c.
2J-5	2- 2x10	*6"o.c.

RAFTER SCHEDULE FOR DECK FRAMING		
MARK	SIZE	SPACING
DR-1	2x8	16"o.c.
DR-2	2x8	16"o.c.
DR-3	2x8	16"o.c.
DR-4	2x8	16"o.c.

HEADER SCHEDULE FOR 2ND FLR FRMG	
MARK	SIZE
2H-1	3- 2x10
2H-2	2- 2x10
2H-3	2- 2x8
2H-4	3- 2x10
2H-5	2- 2x8
2H-6	2- 2x8

2ND FLR CONNECTOR SCHEDULE		
MARK	EAST END or SOUTH END	WEST END or NORTH END
2B-1	See Post Schedule	See Post Schedule
2B-2	See Post Schedule	Simpson LUS28-3
2B-3	See Post Schedule	See Section C.6/S5
2B-4	See Section C.6/S5	See Post Schedule
2B-5	See Post Schedule	See Post Schedule
2B-6	See Post Schedule	Simpson HB5.50/9.25 into 2B-2
2B-7	Simpson LUSC26-2 into 2B-5	Simpson LUSC26-2 into 2B-4
2J-1	Simpson LUS28 into 2B-2 and 2B-6	
2J-2	Simpson LUS28 into 2B-2 and 2B-5	
2J-4	Toenail to plate	
2J-4a	Toenail to plate and Simpson LUS28-2 into 2B-4 (where applicable)	

MEMBER DESIGNATION KEY

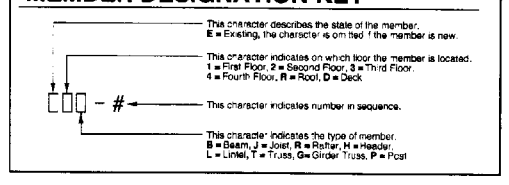

© 2005 Michael R. Charek, Architect

Michael R. Charek Architect
Structural Consultants:
SWIFT ENGINEERING
Consulting Structural Engineers
25 Hartley Street
Portland, Maine 04103
(207) 761-0556

STATE OF MAINE
EDWARD J. CUNDY
#7362
REGISTERED
PROFESSIONAL ENGINEER

Morgan Residence
Renovation & Addition
140 Noyes Street
Portland, Maine

Title
SECOND FLOOR FRAMING PLAN

Scale: 1/4" = 1'-0"

Date: 10/28/05

Revisions

Sheet
S2

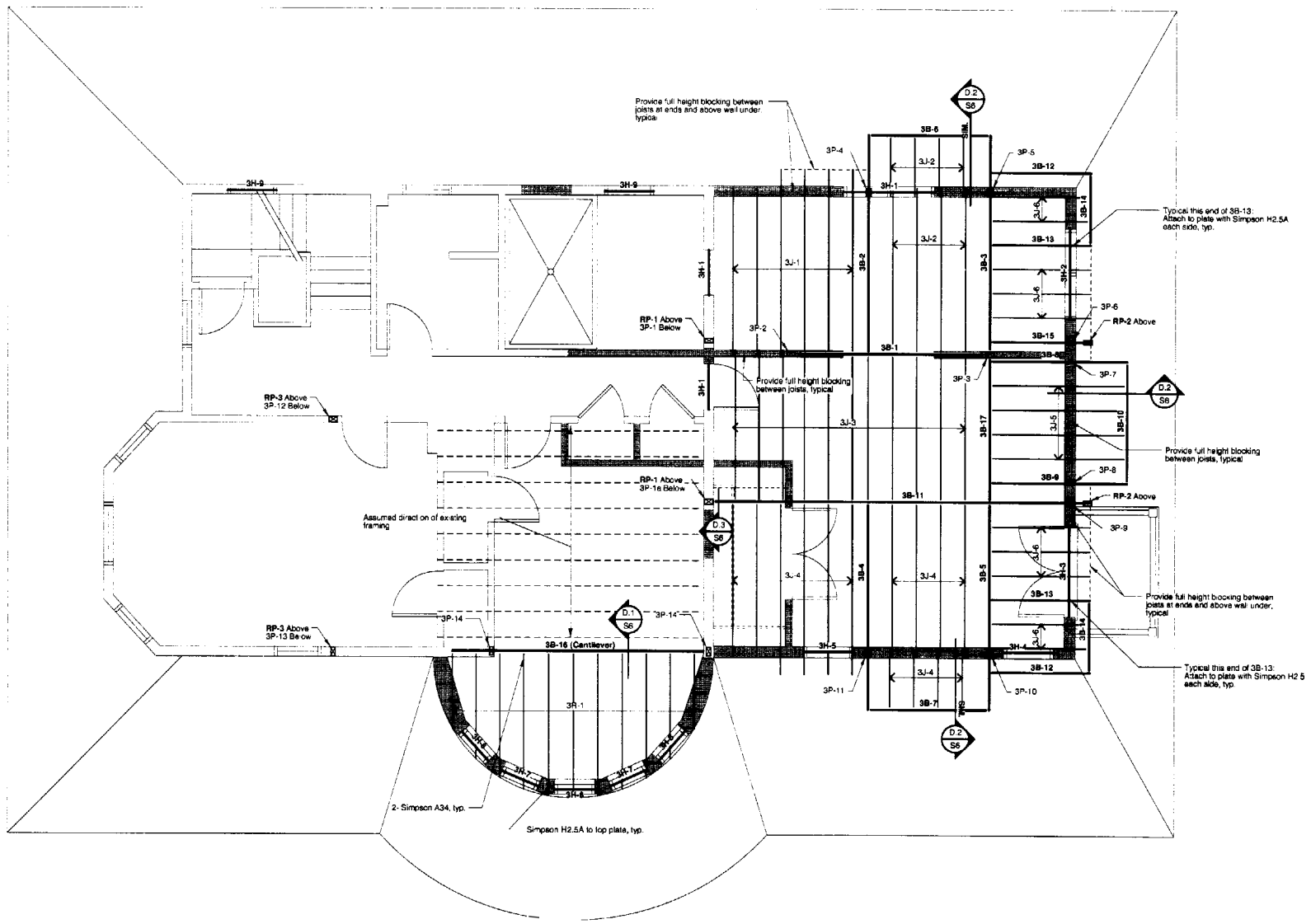

MARK	SIZE	POST CAP	POST BASE
3P-1	2- 2x6	Toenail to plate	Toenail to plate
3P-1a	3 1/2 x 5 1/4 LVL	See Section D.3	Simpson BC4Q onto plate
3P-2	4x6*	Simpson BCS2-3/6	Toenail to plate
3P-3	4x6*	Simpson BCS2-3/6	Toenail to plate
3P-4	4x6	Simpson BCS2-3/6	Toenail to header
3P-5	4x6	Simpson BC6 (shim as required)	Toenail to plate
3P-6	3 1/2 x 5 1/4 LVL	See Section D.3	Toenail to plate
3P-7	2x6	Toenail to plate	Toenail to plate
3P-8	2x6	Toenail to plate	Toenail to plate
3P-9	3 1/2 x 5 1/4 LVL	See Section D.3	Simpson BC4Q onto plate
3P-10	4x6	Simpson BC6 (shim as required)	Toenail to plate
3P-11	4x6	Simpson BCS2-3/6	Toenail to plate
3P-12	4x6*	Toenail to plate	Toenail to plate
3P-13	2- 2x6	Toenail to plate	Toenail to plate
3P-14	2- 2x6	Simpson BCS2-2/4	Toenail to plate

* = Wide face parallel with wall.

BEAM SCHEDULE FOR 3RD FLR FRAMING	
MARK	SIZE
3B-1	3- 2x12
3B-2	3- 2x8
3B-3	3- 1 3/4" x 7 1/4" LVL
3B-4	3- 2x8
3B-5	3- 1 3/4" x 7 1/4" LVL
3B-6	2- 2x8
3B-7	2- 2x6
3B-8	3- 2x8
3B-9	3- 2x8
3B-10	2x8
3B-11	3 1/2" x 14" LVL
3B-12	2x8
3B-13	2- 2x8
3B-14	2x8
3B-15	5 1/4" x 7 1/4" LVL
3B-16	3 1/2" x 11 7/8" LVL
3B-17	2- 2x8

JOIST SCHEDULE FOR 3RD FLR FRAMING		
MARK	SIZE	SPACING
3J-1	2x8	16"o.c.
3J-2	2x8	16"o.c.
3J-3	2x8	16"o.c.
3J-4	2x8	16"o.c.
3J-5	3- 2x8 - stud under each	16"o.c.
3J-6	2x8 - stud under each	16"o.c.

HEADER SCHEDULE FOR 3RD FLR FRMG
MARK	SIZE
3H-1	2- 2x10
3H-2	2- 2x10
3H-3	2- 2x10
3H-4	2- 2x10
3H-5	2- 2x10
3H-6	2- 2x10
3H-7	2- 2x10
3H-8	2- 2x10
3H-9	2- 2x10

RAFTER SCHEDULE FOR 3RD FLR FRAMING		
MARK	SIZE	SPACING
3R-1	2x8	*6"o.c.

3RD FLR CONNECTOR SCHEDULE		
MARK	EAST END or SOUTH END	WEST END or NORTH END
3B-1	See Post Schedule	See Post Schedule
3B-2	See Post Schedule	Simpson LUS26-3
3B-3	See Post Schedule	Simpson HGUI46 into 3B-1
3B-4	Simpson LUS26-3	See Post Schedule
3B-5	Simpson HGUI46 into 3B-11	See Post Schedule
3B-6	Simpson LUSC26-2 into 3B-3	Simpson LUSC26-2 into 3B-2
3B-7	Simpson LUSC26-2 into 3B-5	Simpson LUSC26-2 into 3B-4
3B-8	See Post Schedule	Simpson LUS26-3 into 3B-17
3B-9	See Post Schedule	Simpson LUS26-3 into 3B-17
3B-10	Toenailed	Toenailed
3B-11	See Post Schedule	See Post Schedule
3B-12	Simpson LUS26	Simpson LUS26
3B-13	Simpson HUS26 into 3B-14	Simpson LUS26-2
3B-14	See 3B-12 and 3B-13 for applicable end	
3B-15	See Post Schedule	Simpson HB5.5/7.25 into 3B-3
3B-16	See Post Schedule	See Post Schedule
3B-17	Simpson LUS26-2	Simpson LUS26-2
3J-1	Simpson LUS26 into 3B-1	
3J-2	Simpson LUS26 into 3B-1/3B-6	
3J-3	Simpson LUS26 into 3B-1/3B-11	
3J-4	Simpson LUS26 into 3B-7/3B-11	
3J-5	Toenailed into 3B-10	Simpson LUS26-3
3J-6	Simpson HUS26 into 3B-3, 3B-5, 3B-14	

MEMBER DESIGNATION KEY

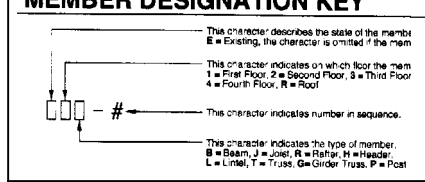

Michael R. Charek Architect
Structural Consultants:
25 Hartley Street
Portland, Maine 04103
(207) 761-0556

SWIFT ENGINEERING
Consulting Structural Engineers
231 Main Street, Norway, Maine 04268
(207) 743-7801 Fax (207) 743-8402
www.swiftengineering.com

STATE OF MAINE
EDWARD J. CUNDY #7382
REGISTERED PROFESSIONAL ENGINEER

Morgan Residence Renovation & Addition

140 Noyes Street
Portland, Maine

Title

THIRD FLOOR FRAMING PLAN

Scale: 1/4" = 1'-0"

Date: 10/28/05

Revisions

Sheet

S3

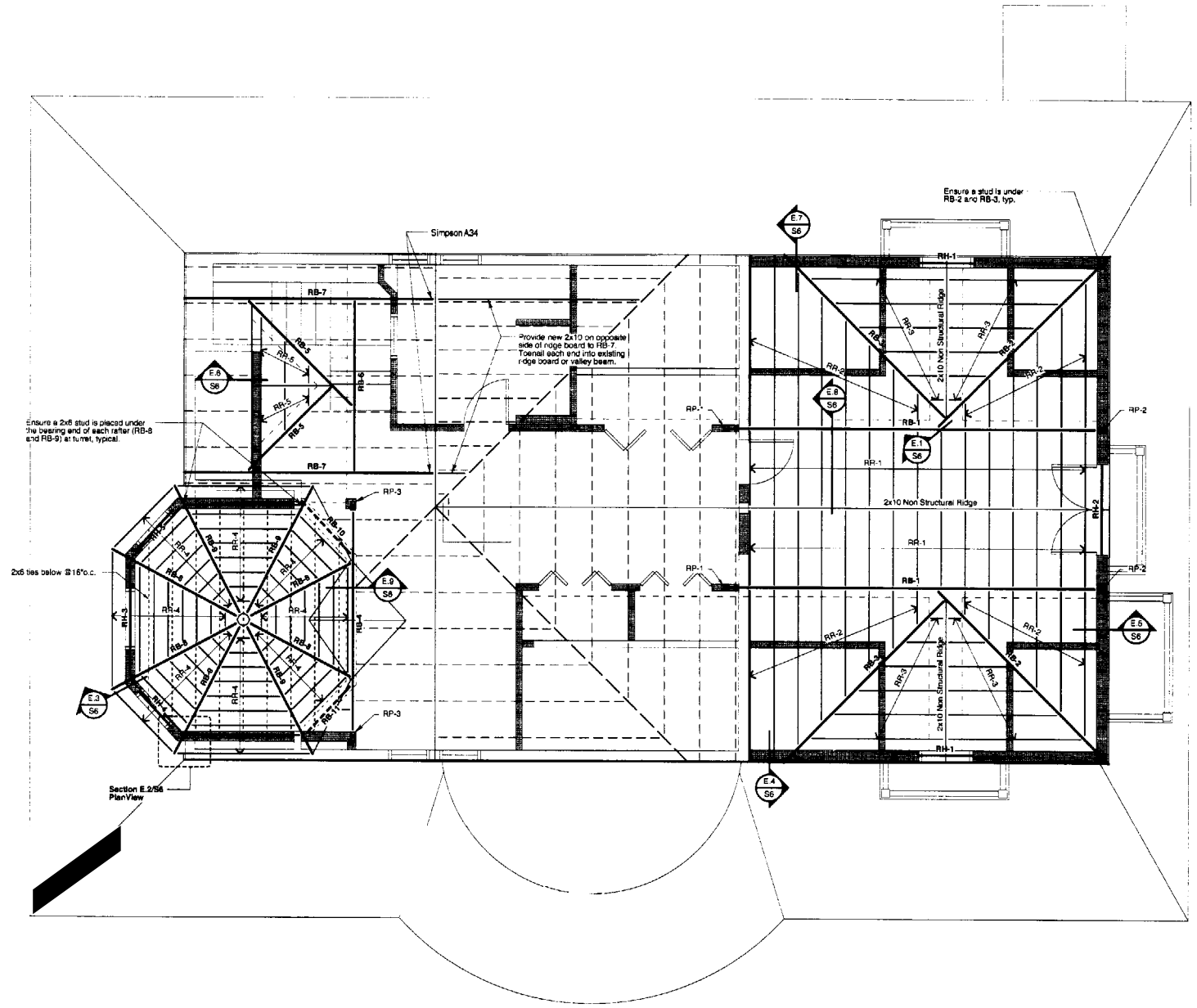

POST SCHEDULE FOR ROOF FRAMING			
MARK	SIZE	POST CAP	POST BASE
RP-1	3 1/2 x 3 1/2 LVL	Simpson BC46 (Shim as required)	Toenailed to plate
RP-2	2- 2x6	Simpson BC6 (Shim as required)	Toenailed to plate
RP-3	2- 2x6	Simpson BC46	Toenailed to plate

BEAM SCHEDULE FOR ROOF FRAMING	
MARK	SIZE
RB-1	5 1/4" x 14" LVL
RB-2	3- 2x12
RB-3	3- 2x12
RB-4	3 1/2" x 9 1/4" LVL
RB-5	2x10
RB-6	2x10
RB-7	2- 2x12
RB-8	2x6
RB-9	2x10
RB-10	2x6
RB-11	2x6

RAFTER SCHEDULE FOR ROOF FRAMING		
MARK	SIZE	SPACING
RR-1	2x6	16"o.c
RR-2	2x10	16"o.c
RR-3	2x8	16"o.c
RR-4	2x6 - Canted	16"o.c. Along Slope
RR-5	2x6	16"o.c.

HEADER SCHEDULE FOR ROOF FRAMING	
MARK	SIZE
RH-1	2- 2x10
RH-2	2- 2x10

ROOF CONNECTOR SCHEDULE		
MARK	EAST END or SOUTH END	WEST END or NORTH END
RB-1	See Post Schedule	See Post Schedule
RB-2	See Section E.1/S6	See Section E.7/S6
RB-3	See Section E.1/S6 (Sim)	Simpson HU212-3
RB-4	See Post Schedule	See Post Schedule
RB-5	Simpson LSSU210	Simpson LSSU210
RB-6	Simpson LUS26	Simpson LUS26
RB-7	See Note on Plan	Toenail to Plate + Simpson H2.5A
RB-8	See Section E.9/S6	See Section E.9/S6
RB-9	See Section E.2/S6	See Section E.2/S6
RB-10 and RB-11	Toenail to RB-4	Toenail to Plate
RR-1	Simpson LSU26	Simpson LSU26
RR-2	Simpson LSSU210	Simpson LSSU210
RR-3	Simpson LSSU28	Simpson LSSU28
RR-4	Simpson LUS26	Simpson LUS26
RR-5	Simpson LSU26	Simpson LSU26
Existing Rafters into New Beams	Toenail with 4- 10d nails at applicable ends	

DRAWING LEGEND

- - - - - - Existing rafters

— — — Existing hips or valley beams

MEMBER DESIGNATION KEY

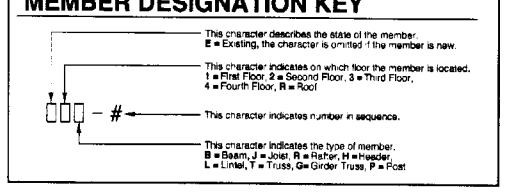

© 2005 Michael R. Charek, Architect

Michael R. Charek Architect
25 Hartley Street
Portland, Maine 04103
(207) 761-0556

Structural Consultants:
SWIFT ENGINEERING
Consulting Structural Engineers
23 Union Street Hallowell, Maine 04347
(207) 622-3846 Fax (207) 622-3847
www.swiftengineers.com

STATE OF MAINE
EDWARD J. CUNDY #7362
REGISTERED PROFESSIONAL ENGINEER

Morgan Residence Renovation & Addition

140 Noyes Street
Portland, Maine

Title

ROOF FRAMING PLAN

Scale: 1/4" = 1'-0"

Date: 10/28/05

Revisions

Sheet

S4

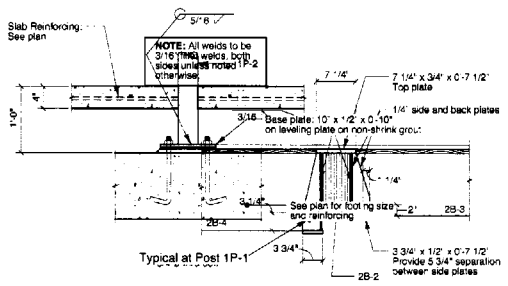

A.1 / S0 SECTION
SCALE: 3/4" = 1'-0"

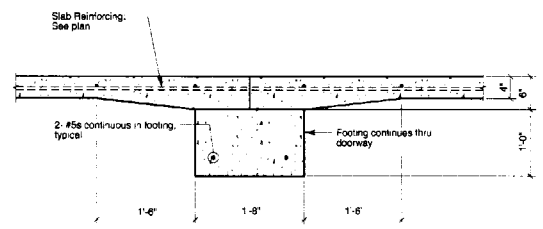

A.2 / S0 SECTION
SCALE: 3/4" = 1'-0"

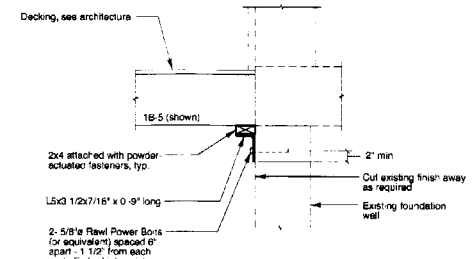

Typical Ledger Detail at Existing Foundation Wall

B.1 / S1 SECTION
SCALE: 3/4" = 1'-0"

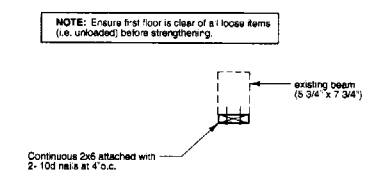

Typical Where Noted

B.2 / S1 SECTION
SCALE: 3/4" = 1'-0"

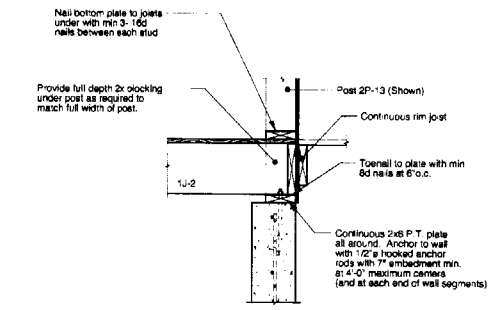

Typical Post Detail and Typical Sill Anchorage

B.3 / S1 SECTION
SCALE: 3/4" = 1'-0"

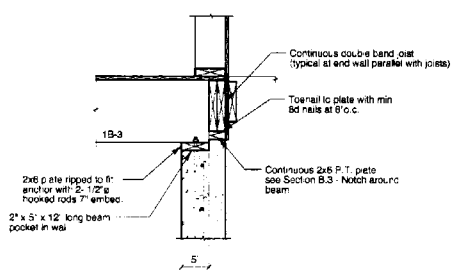

B.4 / S1 SECTION
SCALE: 3/4" = 1'-0"

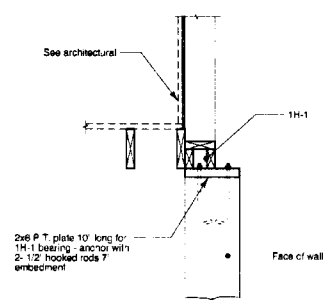

Typical Opposite Hand

B.5 / S1 SECTION
SCALE: 3/4" = 1'-0"

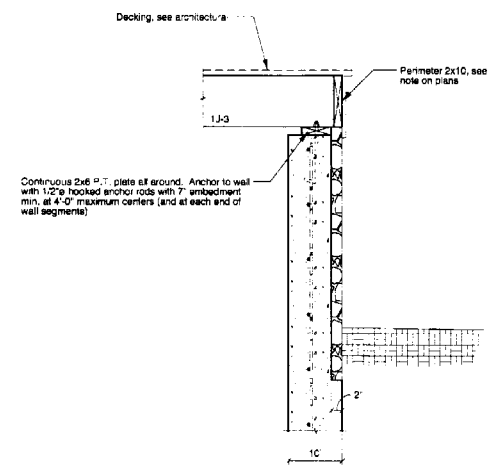

Typical Joist Bearing At Edge of Deck
(Similar where joists are parallel to perimeter joist)

B.6 / S1 SECTION
SCALE: 3/4" = 1'-0"

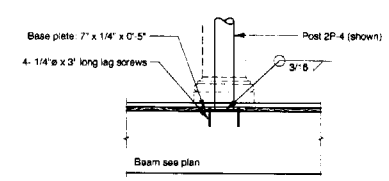

Typical at Posts 2P-1 thru 2P-4

B.7 / S1 SECTION
SCALE: 3/4" = 1'-0"

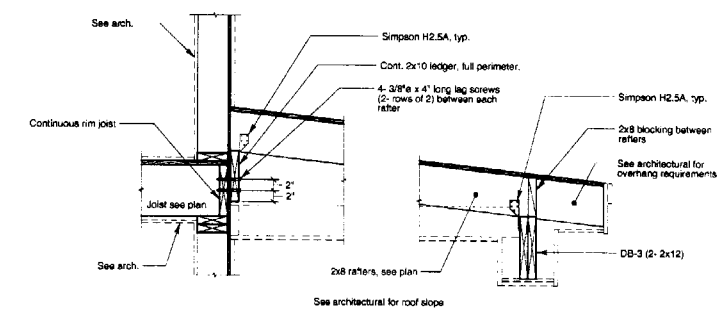

Typical Porch Roof Detail

C.1 / S2 SECTION
SCALE: 3/4" = 1'-0"

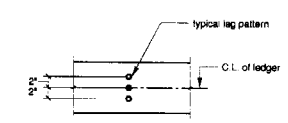

Detail - 2
Refer to Section C.5/S5

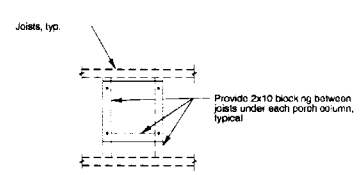

Detail - 1
Refer to Section C.2/S5

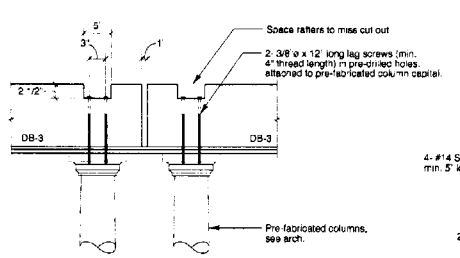

Similar at Plywood Box Beam Except NO Cut-out

C.2 / S2 SECTION
SCALE: 3/4" = 1'-0"

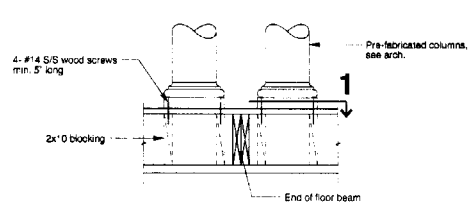

Section at Column Base

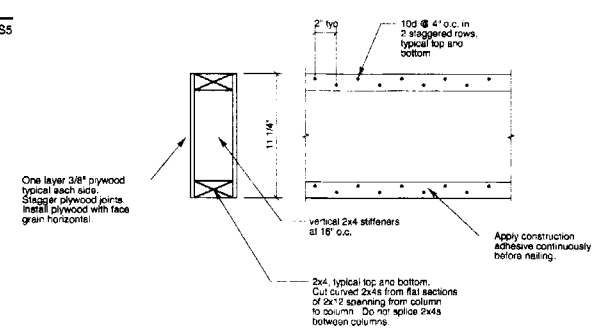

C.3 / S2 Plywood Box Beam
SCALE: 1 1/2" = 1'-0"

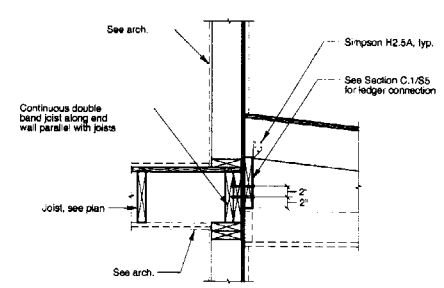

Typical Along Endwall Parallel with Joists

C.4 / S2 SECTION
SCALE: 3/4" = 1'-0"

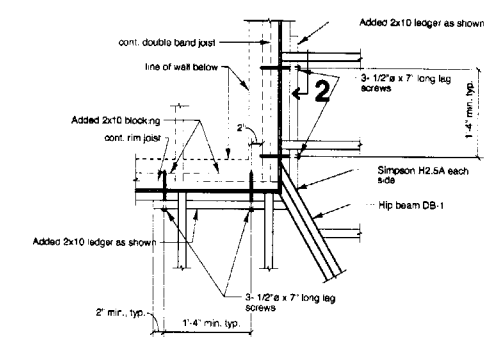

C.5 / S2 SECTION - PLANVIEW
SCALE: 3/4" = 1'-0"

Michael R. Charek Structural Consultants:
Architect
25 Hartley Street
Portland, Maine 04103
(207) 761-0556

SWIFT ENGINEERING
Consulting Structural Engineers
21 Milk Street, Portland, Maine 04101
Phone: (207) 772-2846 Fax: (207) 772-2851
www.swiftengineers.com

STATE OF MAINE
EDWARD L. CUNDY #7362
REGISTERED PROFESSIONAL ENGINEER

Morgan Residence
Renovation& Addition

140 Noyes Street
Portland, Maine

Title

CTURAL
TAILS

Sca 3 SHOV

Dat 10/28

Isions

Sheet

S5

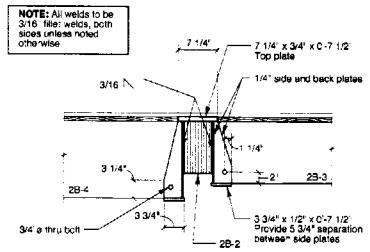

C.6 / S2 SECTION
SCALE: 3/4" = 1'-0"

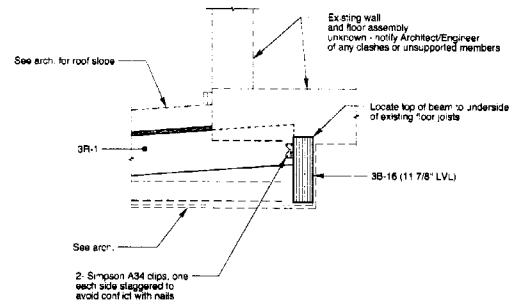

D.1 / S3 SECTION
SCALE: 3/4" = 1'-0"

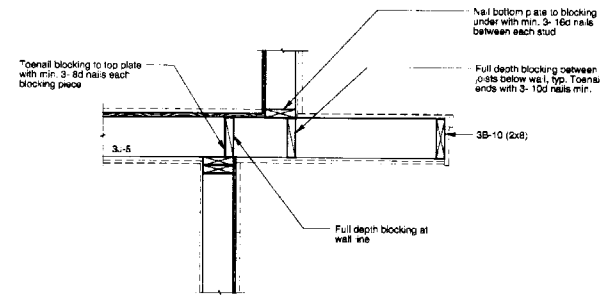

D.2 / S3 SECTION
SCALE: 3/4" = 1'-0"

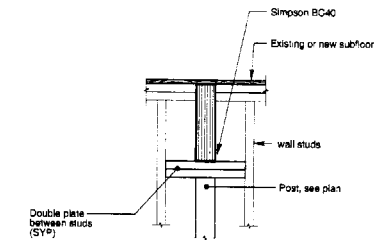

D.3 / S3 SECTION
SCALE: 3/4" = 1'-0"

Detail - 1
Refer to Section E.1/S5

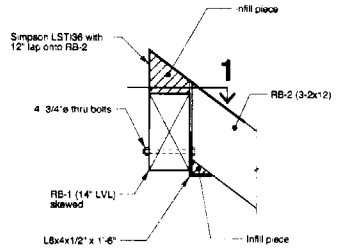

E.1 / S2.4 SECTION
SCALE: 3/4" = 1'-0"

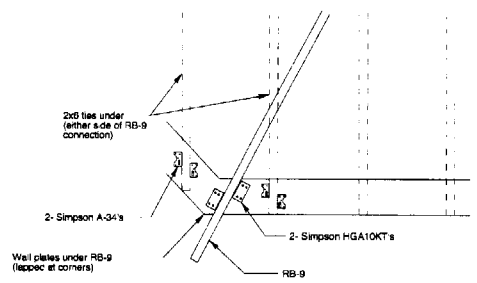

Plan View - Typical at RB-9

E.2 / S2.4 SECTION
SCALE: 3/4" = 1'-0"

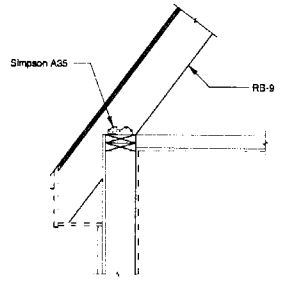

Typical at base of RB-9

E.3 / S2.4 SECTION
SCALE: 3/4" = 1'-0"

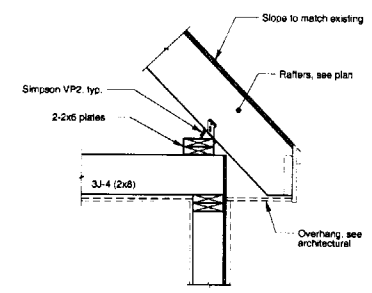

E.4 / S2.4 SECTION
SCALE: 3/4" = 1'-0"

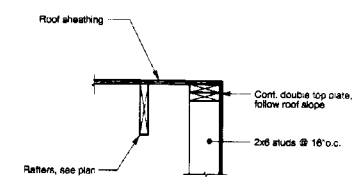

Typical Gable End Wall Detail

E.5 / S2.4 SECTION
SCALE: 3/4" = 1'-0"

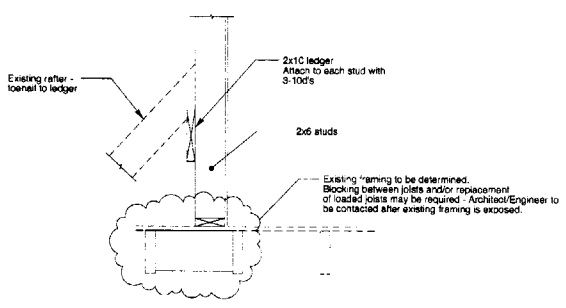

E.6 / S2.4 SECTION
SCALE: 3/4" = 1'-0"

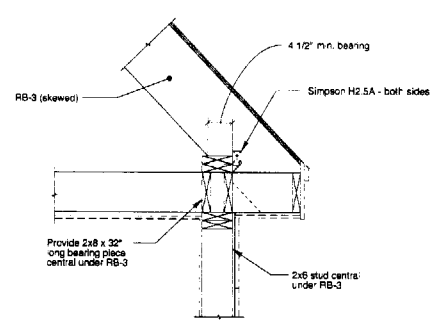

E.7 / S2.4 SECTION
SCALE: 3/4" = 1'-0"

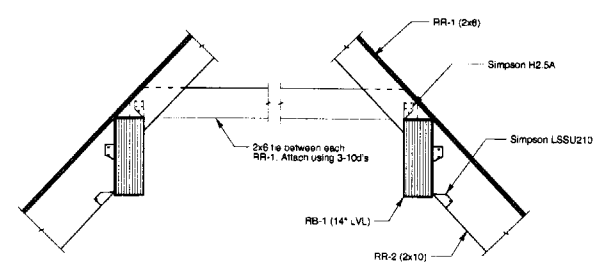

E.8 / S2.4 SECTION
SCALE: 3/4" = 1'-0"

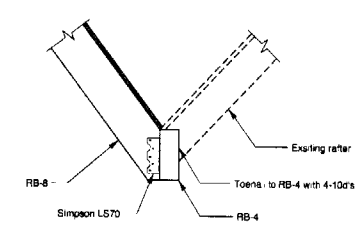

Typical Attachment of RB-8 to RB-4

E.9 / S2.4 SECTION
SCALE: 3/4" = 1'-0"

© 2005 Michael R. Charek, Architect

Michael R. Charek Architect
25 Hartley Street
Portland, Maine 04103
(207) 761-0556

Structural Consultants:
SWIFT ENGINEERING
Consulting Structural Engineers
217 Main Street, Norway, Maine 04268
(207) 743-7801 (Norway) (207) 878-9560 (Portland)
www.swiftengineers.com

STATE OF MAINE
EDWARD J. CUNDY
#7982
REGISTERED
PROFESSIONAL ENGINEER

Morgan Residence
Renovation & Addition

140 Noyes Street
Portland, Maine

Title
STRUCTURAL DETAILS

Scale: AS SHOWN

Date: 10/28/05

Revisions

Sheet
S6

GENERAL DESIGN NOTES

1. APPLICABLE CODE: IBC 2003

2. ROOF LOADS:

DEAD LOAD: 15 PSF
SNOW LOAD: Pg = 50 PSF, Ce = 0.9, Ct = 1.0, I = 1.0, Pf = 50 PSF. DRIFT LOAD WHERE REQUIRED OR AS SHOWN ON PLANS.

3. FLOOR LOADS:

DEAD LOAD: 10 PSF
LIVE LOAD: 40 PSF

4. IT SHALL BE THE RESPONSIBILITY OF THE CONTRACTOR TO DETERMINE THE ERECTION PROCEDURE AND SEQUENCE AND PROVIDE ADEQUATE TEMPORARY SUPPORTS AND BRACING NECESSARY TO INSURE THE SAFETY OF THE STRUCTURE DURING CONSTRUCTION.

5. ALL DIMENSIONS AND ELEVATIONS NOTED ON THE STRUCTURAL DRAWINGS ARE TO BE COORDINATED BY THE CONTRACTOR WITH THE ARCHITECTURAL DRAWINGS. ANY DISCREPANCIES SHALL BE BROUGHT TO THE ATTENTION OF THE ARCHITECT BEFORE PROCEEDING.

WOOD FRAMING NOTES

1. BEARING WALLS ARE FRAMED WITH 2x6 SPF(s) #2 STUDS @ 16 INCHES ON CENTER.

2. REQUIRED WOOD SPECIES (DESIGN VALUES PUBLISHED IN THE 2001 SUPPLEMENT TO THE NATIONAL DESIGN SPECIFICATION FOR WOOD CONSTRUCTION):

SPRUCE-PINE-FIR (SOUTH): SPF(s) #2, GRADED ACCORDING TO NLGA RULES WITH THE FOLLOWING BASE DESIGN PROPERTIES FOR LUMBER 2 TO 4 INCHES THICK:

Fb = 775 psi
Fv = 135 psi
Fc parallel = 1000 psi
Fc perpendicular = 335 psi
E = 1100 ksi

SPRUCE-PINE-FIR (SOUTH): SPF(s) #2, GRADED ACCORDING TO NLGA RULES WITH THE FOLLOWING BASE DESIGN PROPERTIES FOR VISUALLY-GRADED TIMBERS 5 INCHES BY 5 INCHES AND LARGER:

BEAMS AND STRINGERS:

Fb = 575 psi
Fv = 125 psi
Fc parallel = 375 psi
Fc perpendicular = 335 psi
E = 1000 ksi

POSTS AND TIMBERS:

Fb = 475 psi
Fv = 125 psi
Fc parallel = 425 psi
Fc perpendicular = 335 psi
E = 1000 ksi

SOUTHERN PINE: SP #2, SPIB GRADE STAMP WITH DESIGN PROPERTIES FOR VISUALLY GRADED LUMBER 2 TO 4 INCHES THICK AND VISUALLY GRADED TIMBERS 5 INCHES BY 5 INCHES AND LARGER AS PUBLISHED IN THE 2001 SUPPLEMENT TO THE NATIONAL DESIGN SPECIFICATION FOR WOOD CONSTRUCTION.

LAMINATED VENEER LUMBER (LVL) WITH THE FOLLOWING BASE DESIGN PROPERTIES:

Beams:
Fb = 3080 psi
Fv = 285 psi
Fc parallel = 3000 psi
Fc perpendicular = 900 psi
E = 2000 ksi

Columns:
Fb = 2200 psi
Fv = 285 psi
Fc parallel = 3000 psi
Fc perpendicular = 900 psi
E = 1800 ksi

THE CONTRACTOR SHALL PROVIDE CERTIFICATION OF LUMBER AND TIMBER SPECIES AND GRADES TO THE ARCHITECT. EACH PIECE MUST BEAR THE APPROPRIATE GRADE STAMP. UNGRADED OR UNMARKED LUMBER WILL NOT BE ACCEPTED.

3. THE TOP AND BOTTOM PLATES OF ALL BEARING WALLS MUST BE DOUBLE 2X6 SOUTHERN YELLOW PINE #2.

4. ROOF SHEATHING IS TO BE 5/8" APA- OR TECO- RATED SHEATHING, EXPOSURE 1 WITH A SPAN RATING OF 40/20. UNLESS PANELS USE TONGUE AND GROOVE, PANEL CLIPS ARE REQUIRED BETWEEN TRUSSES AND OTHER ROOF FRAMING MEMBERS.

5. WALL SHEATHING IS TO BE 1/2" " APA- OR TECO- RATED SHEATHING, EXPOSURE 1 WITH A SPAN RATING OF 24/16. SHEATHING IS TO BE APPLIED HORIZONTALLY. THE SHEATHING MUST OVERLAP THE STUDS AND TOP AND BOTTOM WALL PLATES.

6. WALL AND ROOF SHEATHING IS TO BE NAILED AT 6 INCHES ON CENTER ALONG SUPPORTED PANEL EDGES, 12 INCHES ON CENTER WITHIN THE PANELS. USE 8d COMMON NAILS.

7. UNLESS INDICATED OTHERWISE, PROVIDE ONE STUD IN A COLUMN FOR EACH LAMINATION OF A BUILT-UP WOOD BEAM OR HEADER. FOR EXAMPLE, FOR A THREE 2x10 HEADER, PROVIDE A THREE-STUD BUILT-UP COLUMN.

8. UNLESS INDICATED OTHERWISE, USE SIMPSON AC AND ACE TYPE POST CAPS TO CONNECT SCHEDULED WOOD COLUMNS TO WOOD BEAMS.

STRUCTURAL STEEL NOTES

1. PROVIDE THE FOLLOWING STEEL GRADES:

HOLLOW STRUCTURAL SECTIONS (ROUND COLUMNS): ASTM A501.
ANGLES, PLATES, BARS: A36.
BOLTS: A325-N

5. THE STRUCTURE IS DESIGNED TO BE SELF-SUPPORTING AND STABLE WHEN THE BUILDING IS FULLY COMPLETED. THE CONTRACTOR IS RESPONSIBLE FOR ERECTION PROCEDURES AND SEQUENCES WHICH WILL INSURE THE SAFETY OF THE STRUCTURE UNTIL COMPLETION IN ACCORDANCE WITH THE AISC CODE OF STANDARD PRACTICE.

FOUNDATION NOTES

1. ASSUMED SOIL BEARING PRESSURE: 2500 PSF.

2. CONCRETE COMPRESSIVE STRENGTH AT 28 DAYS:
WALLS, FOOTINGS: 3000 PSI
INTERIOR SLABS: 2500 PSI

3. ALL CONCRETE REINFORCING TO BE GRADE 60 NEW DEFORMED BARS.

4. ALL SLAB SAW-CUT JOINTS TO BE 1/4 OF SLAB THICKNESS, MIN.

5. —⊥— INDICATES CONTROL JOINT IN SLAB: EITHER SAW-CUT, PLASTIC T-STRIP OR CONSTRUCTION.

6. WALL CONTROL JOINTS NOT TO BE SPACED OVER 40 FEET ON CENTER.

7. SEE ARCHITECTURAL DRAWINGS FOR ALL OPENINGS THROUGH WALLS AND SLABS.

8. GROUT COLUMN BLOCKOUTS SOLID AFTER COLUMN INSTALLATION.

9. FILL PLACED ADJACENT TO FOUNDATIONS AND WITHIN 6 INCHES OF FLOOR SLABS SHOULD BE CLEAN GRANULAR MATERIAL MEETING THE FOLLOWING GRADATION:

SELECT FILL

SIEVE SIZE	PERCENT FINER BY WEIGHT
4 INCH	100
3 INCH	90 TO 100
1/4 INCH	25 TO 90
#40	0 TO 30
#200	0 TO 5

10. UNLESS NOTED OTHERWISE, PROVIDE 3/4" DIAMETER BY 8-INCH HOOKED ANCHORS AT 4'-0" o.c. ALONG ALL EXTERIOR FOUNDATION WALLS.

11. BOTTOM OF EXTERIOR WALL FOOTINGS TO EXTEND A MINIMUM OF 4'-6" BELOW FINISH GRADE.

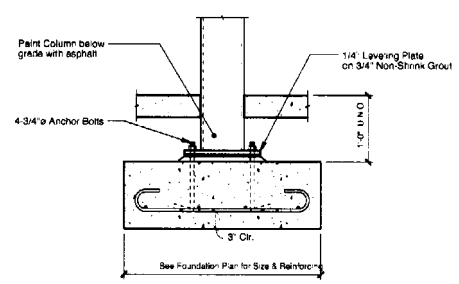

Column Footing Detail

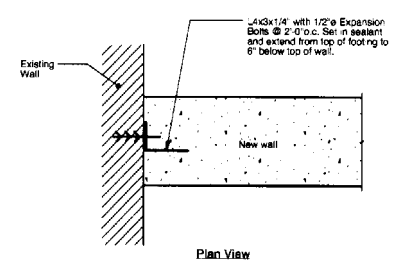

Plan View

Typical @ Connections Of New To Existing Foundation Walls

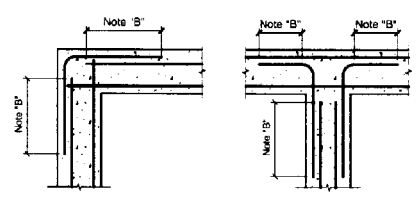

NOTE "B": Refer to Tension Lap Splice Length (other bars) in "Development Length And Splice Table".

Corner & Intersection Reinforcing Details

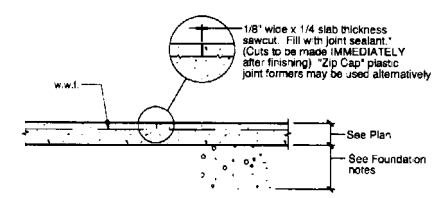

Control Joint In Slab On Grade

* Sealant to be used only at exposed slabs. Fill joints with non-shrink grout at slabs to be covered with tile, carpeting, etc.

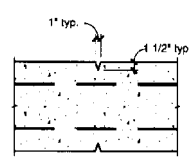

Wall Control Joint

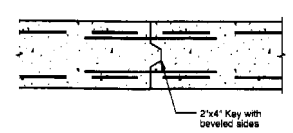

Wall Construction Joint

TYPICAL CONCRETE DETAILS

CONCRETE DEVELOPMENT LENGTH AND SPLICE TABLE

Grade 60, Uncoated bars - [f'c=3000 psi, Normal Weight Concrete]

Bar Size	TENSION LAP SPLICE LENGTHS (inches) Top Bars Category 1	2	3	4	5	6	Other Bars Category 1	2	3	4	5	6
#3	21	21	21	21	21	21	16	16	16	16	16	16
#4	30	28	28	28	28	28	23	22	22	22	22	22
#5	46	37	35	35	35	35	36	29	27	27	27	27
#6	55	52	46	42	42	42	50	40	35	32	32	32
#7	89	71	63	50	49	49	69	55	48	39	38	38
#8	117	94	82	66	59	58	90	72	63	51	45	43
#9	148	119	104	83	74	63	114	91	80	64	57	48
#10	188	151	132	106	94	76	145	116	102	81	73	58
#11	231	185	162	130	116	93	178	142	125	100	89	71

Grade 60, Uncoated bars - [f'c=4000 psi, Normal Weight Concrete]

Bar Size	TENSION LAP SPLICE LENGTHS (inches) Top Bars Category 1	2	3	4	5	6	Other Bars Category 1	2	3	4	5	6
#3	18	18	18	18	18	18	16	16	16	16	16	16
#4	26	24	24	24	24	24	20	19	19	19	19	19
#5	40	32	30	30	30	30	31	25	23	23	23	23
#6	57	45	40	36	36	36	44	35	31	28	28	28
#7	77	62	54	43	42	42	59	48	42	33	33	33
#8	102	81	71	57	51	48	78	63	55	44	39	37
#9	128	103	90	72	64	55	99	79	69	56	50	42
#10	163	131	114	92	82	65	126	101	88	70	63	50
#11	200	160	140	112	100	80	154	123	108	86	77	62

NOTES:

1. The lap splice table above is taken directly from the "1992 CRSI Handbook". The results are based on the Class "B" splice.
2. Top bars are horizontal bars with more than 12 inches of concrete cast below the bars.
3. To calculate the Development Length, divide by a factor of (1.3).
4. Category 1 and 2 splice lengths must be approved by the engineer.
5. Where different size bars are spliced, use lap splice length as required for the largest bar.

CATEGORIES

Structural Element	Concrete Cover	Category, According To Center-To-Center Bar Spacing: ≤ 3db	> 3db < 4db	≥ 4db < 6db	> 6db
Beams, Columns, And Inner Layer Of Walls or Slabs	< db	1	1	1	2
	> db	1	3	5	6
All Others	< db	1	1	1	2
	> db < 2db	1	3	3	4
	≥ 2db	1	3	5	6

COMPRESSION (ALL CONCRETE STRENGTHS)

Development Length	All Bars: 22db ≥ 8"
Lap Splice Length	#3-#11: 30db ≥ 12"

Typical Abreviations

db = Nominal Bar Diameter
> = Greater Than
≥ = Greater Than or Equal To
< = Less Than
≤ = Less Than or Equal To

MINIMUM WALL REINFORCING*
(Grade 60, U.N.O.)

Wall Thickness	No. of Rows	Horizontal Reinforcing	Vertical Reinforcing
8"	1 @ Midwall	#4s @ 10"	#4s @ 18"
10"	1 @ Midwall	#4s @ 10"	#4s @ 18"
12", 14"	2	#4s @ 12"	#4s @ 18"
15", 16"	2	#4s @ 12"	#4s @ 18"
18", 20"	2	#5s @ 15"	#5s @ 18"

NOTE:

1. Walls of fractional thickness shall be reinforced as a wall of the next highest thickness.

*Schedule to be used when reinforcing is not noted on plans.

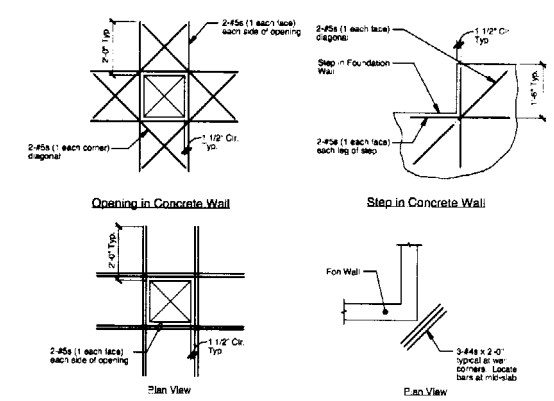

Opening in Concrete Wall

Step in Concrete Wall

Plan View

Opening in Concrete Slab

Plan View

Interior Corners in Concrete Slab

TYPICAL ADDED REINFORCING

Structural Consultants:
SWIFT ENGINEERING
Consulting Structural Engineers
Phone: 207.761.0555 Fax: 207.761.0556
www.swiftengineering.com

Michael R. Charek
Architect
25 Hartley Street
Portland, Maine 04103
(207) 761-0556

STATE OF MAINE
EDWARD J. CUNDY
#7382
REGISTERED PROFESSIONAL ENGINEER

Renovation & Addition
140 Noyes Street
Portland, Maine

Title
GENERAL NOTES, SCHEDULES & TYPICAL DETAILS

NO NE
11 /05
sion

7

DEMOLITION NOTES

1. DEMOLISH PORCHES, EXTERIOR WALLS, FOUNDATIONS, INTERIOR PARTITIONS, FLOORS, CEILINGS, SYSTEMS, AND BUILDING COMPONENTS DESIGNATED TO BE REMOVED.
2. PROTECT PORTIONS OF BUILDING ADJACENT TO OR AFFECTED BY SELECTIVE DEMOLITION. DO NOT BEGIN DEMOLITION UNTIL TEMPORARY DUST PARTITIONS HAVE BEEN INSTALLED AND APPROVED BY OWNER.
3. BEFORE CUTTING OR REMOVING STRUCTURAL COMPONENTS, EXPOSE AFFECTED AREAS OF EXISTING STRUCTURE FOR INSPECTION BY THE ARCHITECT.
4. REMOVE AND LEGALLY DISPOSE OF DEMOLISHED MATERIALS OFF- SITE.
5. ASBESTOS AND HAZARDOUS MATERIALS DEMOLITION OR REMOVAL WORK IS NOT PART OF THIS CONTRACT.
6. SUBMIT FOR APPROVAL SELECTIVE DEMOLITION SCHEDULE, INCLUDING SCHEDULE AND METHODS FOR CAPPING AND CONTINUING UTILITY SERVICE.
7. COMPLY WITH GOVERNING CODES AND REGULATIONS. USE EXPERIENCED WORKERS.
8. IMMEDIATE AREAS OF WORK WILL NOT BE OCCUPIED BY OWNER DURING SELECTIVE DEMOLITION.
9. DO NOT DAMAGE BUILDING ELEMENTS AND IMPROVEMENTS INDICATED TO REMAIN. ITEMS OF SALVAGE VALUE AND NOT INCLUDED ON SCHEDULE OF SALVAGE ITEMS TO BE RETURNED TO OWNER MAY BE REMOVED FROM STRUCTURE. STORAGE OR SALE OF ITEMS AT PROJECT SITE IS PROHIBITED.
10. CEASE OPERATIONS IF PUBLIC SAFETY OR REMAINING STRUCTURES ARE ENDANGERED. PERFORM TEMPORARY CORRECTIVE MEASURES UNTIL OPERATIONS CAN BE CONTINUED PROPERLY.
11. CONTRACTOR WILL BE RESPONSIBLE FOR BUILDING SECURITY AND WEATHER PROTECTION THROUGHOUT CONSTRUCTION.
12. ITEMS TO BE REMOVED FROM SITE BY CONTRACTOR:
    - A. PORTIONS OF BUILDING AS NOTED.
    - B. SELECTED PARTITIONS AND FLOORING AS NOTED.
    - C. EXISTING WINDOWS BACK TO ROUGH FRAMING IN ALL BUT BASEMENT AREA.
    - D. EXISTING SIDING AND ROOFING BACK TO SHEATHING.
    - E. MISCELLANEOUS ITEMS OF EXISTING CONSTRUCTION AS NOTED.
13. ITEMS TO REMAIN IN PLACE AND PROTECTED FOR REUSE:
    - A. ALL ITEMS NOT SCHEDULED TO BE REMOVED
14. ITEMS TO BE SALVAGED FOR REINSTALLATION IN THIS PROJECT :
    - A. EXISTING DOORS AND FRAMES AS DIRECTED BY OWNER.

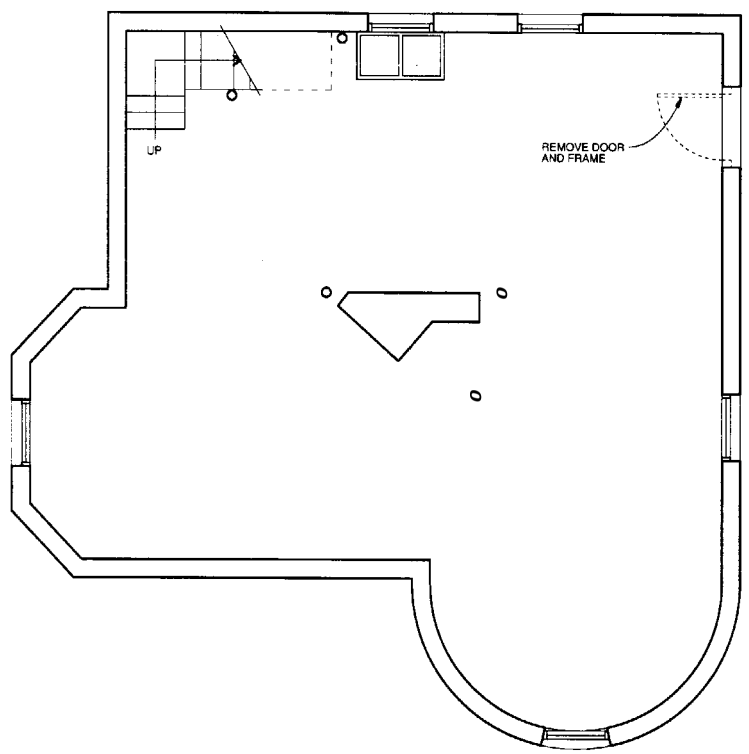

1 BASEMENT DEMOLITION PLAN
SCALE: 1/4" = 1'-0"

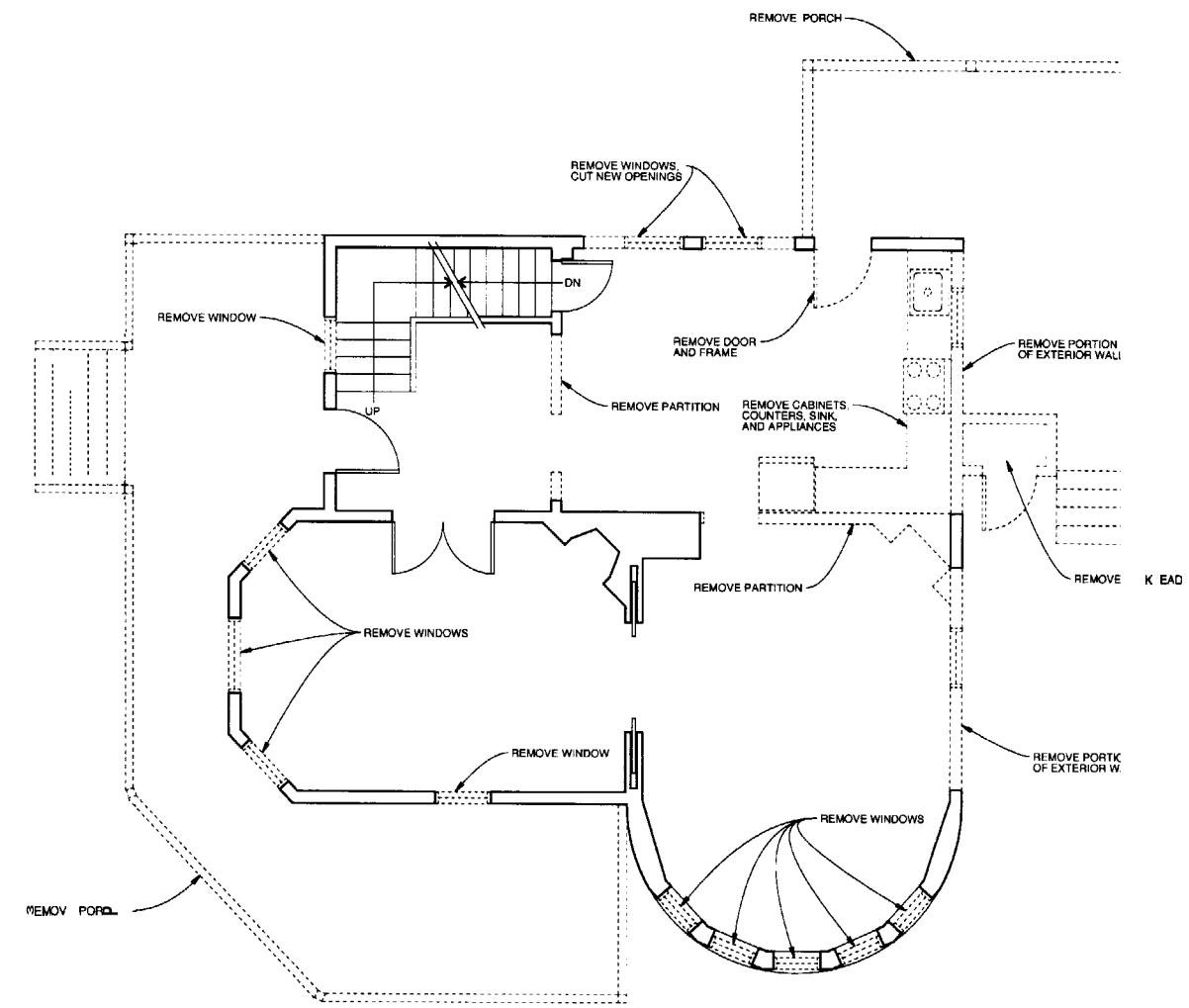

1 FIRST FLOOR DEMOLITION PLAN
SCALE: 1/4" = 1'-0"

PARTITIONS/WALLS KEY
EXISTING TO REMAIN
EXISTING TO BE REMOVED

© 2006 Michael R. Charek, Architect

Michael R. Charek Architect
25 Hartley Street
Portland, Maine 04103
(207) 761-0556

Morgan Residence Renovation & Addition
140 Noyes Street
Portland, Maine

Title
BASEMENT & FIRST FLOOR DEMOLITION PLAN

Scale: 1/4" = 1'-0"

Date: 10/31/05

Revisions

Sheet
D1

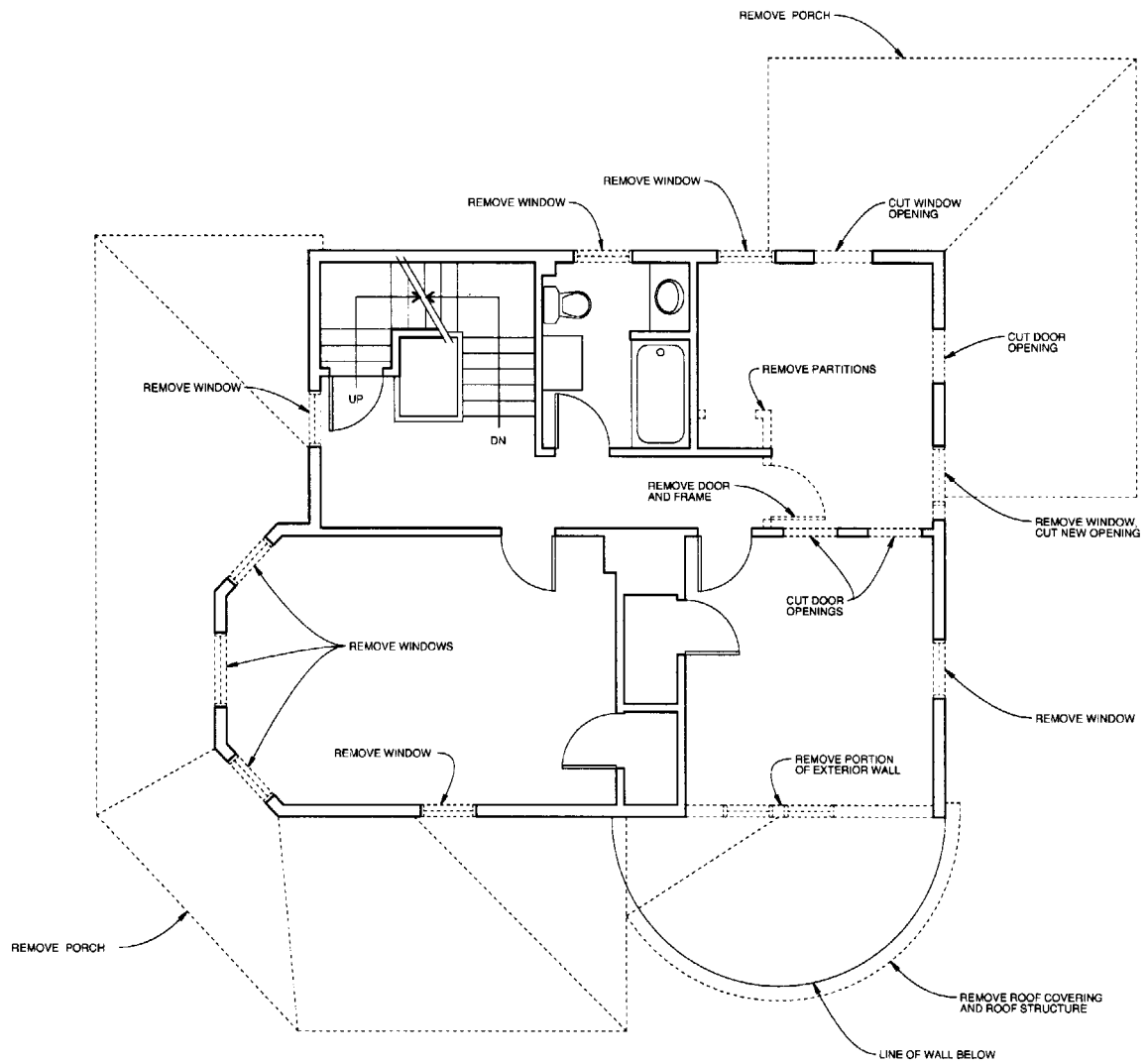

1 SECOND FLOOR DEMOLITION PLAN
SCALE: 1/4" = 1'-0"

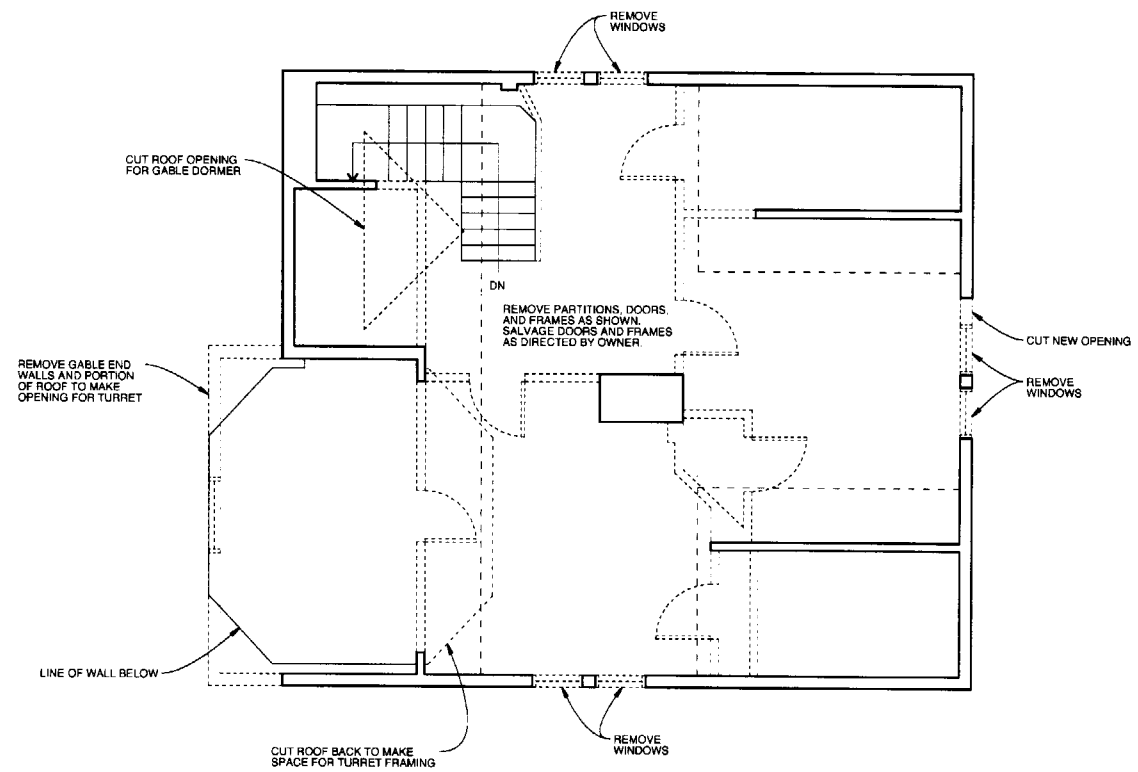

1 THIRD FLOOR DEMOLITION PLAN
SCALE: 1/4" = 1'-0"

PARTITIONS/WALLS KEY
EXISTING TO REMAIN
EXISTING TO BE REMOVED

© 2005 Michael R. Charek, Architect

Michael R. Charek
Architect
25 Hartley Street
Portland, Maine 04103
(207) 761-0556

Morgan Residence
Renovation & Addition
140 Noyes Street
Portland, Maine

Title
SECOND AND THIRD FLOOR DEMOLITION PLAN

Scale: 1/4" = 1'-0"
Date: 10/31/05

Revisions

Sheet
D2

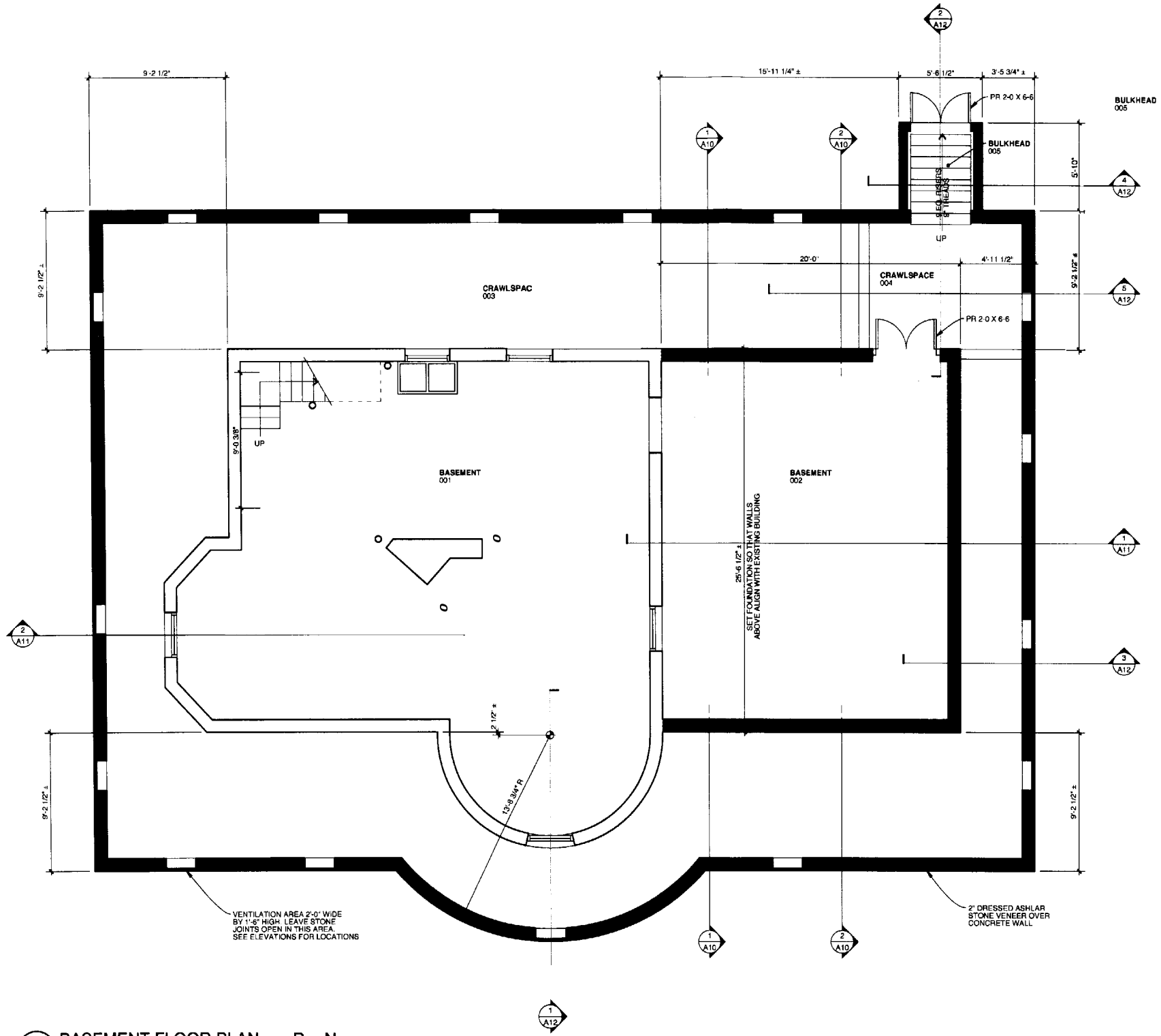

1 BASEMENT FLOOR PLAN P N
SCALE: 1/4" = 1'-0"

GENERAL NOTES

1. BEFORE BEGINNING WORK AT THE SITE, AND THROUGHOUT THE COURSE OF THE WORK, INSPECT AND VERIFY THE LOCATION AND CONDITION OF EVERY ITEM AFFECTED BY THE WORK UNDER THIS CONTRACT AND REPORT DISCREPANCIES TO ARCHITECT BEFORE BEGINNING WORK RELATED TO THAT BEING INSPECTED.
2. THE ARCHITECTURAL DRAWINGS SHOW PRINCIPAL AREAS WHERE WORK MUST BE ACCOMPLISHED UNDER THIS CONTRACT. INCIDENTAL WORK MAY ALSO BE NECESSARY IN AREAS NOT SHOWN ON THE ARCHITECTURAL DRAWINGS DUE TO CHANGES AFFECTING EXISTING MECHANICAL, ELECTRICAL, PLUMBING, OR OTHER SYSTEMS. SUCH INCIDENTAL WORK IS ALSO PART OF THIS CONTRACT. INSPECT THOSE AREAS, ASCERTAIN WORK NEEDED, AND DO THAT WORK IN ACCORDANCE WITH THE CONTRACT REQUIREMENTS, AT NO ADDITIONAL COST.
3. DIMENSIONS TO EXISTING SURFACES ARE TO FINISHED FACE. DIMENSIONS TO NEW PARTITIONS AND WALLS ARE TO FINISHED FACE, UNLESS OTHERWISE NOTED. DIMENSIONS TO DOORS AND WINDOWS ARE TO EDGES OF UNIT. DIMENSIONS TO COLUMNS ARE TO CENTERLINE.
4. DO NOT DRILL OR CUT EXISTING FLOOR JOISTS, BEAMS, COLUMNS, OR OTHER STRUCTURAL MEMBERS UNLESS SPECIFICALLY INDICATED.
5. PROTECT EXISTING WORK TO REMAIN FROM DAMAGE.
6. REPAIR, PATCH, AND FINISH, OR REFINISH AS APPLICABLE, TO MATCH ADJACENT EXISTING FINISHES. THOSE EXISTING SURFACES DAMAGED OR NEWLY EXPOSED DURING PERFORMANCE OF THE WORK.
7. EXCEPT IN SPACES WHERE NO WORK UNDER THIS CONTRACT IS REQUIRED, ENCLOSE EXISTING AND NEW CONDUITS, DUCTS, PIPES, AND SIMILAR ITEMS IN FURRING WHERE SUCH ITEMS PASS THROUGH FINISHED SPACES WHETHER OR NOT FURRING IS INDICATED. INSULATE IN UNHEATED SPACES.
8. WHERE CONDUITS, WIRES, PIPES, AND SIMILAR ITEMS ARE TO BE INSTALLED IN EXISTING WALLS OR PARTITIONS, NEATLY CHASE THE WALLS OR PARTITIONS, INSTALL THE ITEMS, AND PATCH THE WALLS OR PARTITIONS TO MAKE THE INSTALLATION NOT DISCERNIBLE IN THE FINISHED WORK.
9. SEAL TIGHT AND PROTECT WITH FIRE SAFING EXISTING AND NEW SLEEVES AND OPENINGS THROUGH FLOORS AND RATED PARTITIONS.
10. WHERE "MATCH EXISTING" IS INDICATED, NEW CONSTRUCTION OR FINISHES, AS APPROPRIATE TO THE NOTE, SHALL MATCH THE EXISTING IN EVERY PARTICULAR.

MECHANICAL SYSTEMS NOTES

1. PROVIDE NEW HYDRONIC HEATING SYSTEM TO OWNER'S SPECIFICATIONS.
2. PROVIDE PANASONIC FV-15VQ3 EXHAUST FANS FOR NEW TOILET ROOM AND BATH ROOMS, DUCTED TO THE OUTSIDE. POWER FANS FROM TIMER SWITCH.
3. SUBMIT DESIGN PLANS AND SPECIFICATIONS TO THE OWNER FOR REVIEW.

PLUMBING SYSTEM NOTES

1. PROVIDE NEW SUPPLY, DRAIN, WASTE, AND VENT PIPING SYSTEMS, AND FIXTURES AND FITTINGS FOR NEW TOILET ROOM AND BATH ROOMS AS SHOWN ON ARCHITECTURAL PLANS. OWNER TO SELECT PLUMBING FIXTURES.
2. MAINTAIN PIPING AND CONNECTIONS TO EXISTING PLUMBING FIXTURES WHICH ARE TO REMAIN.
3. PROVIDE NEW DOMESTIC WATER HEATER, PIPED INTO EXISTING SYSTEM.
4. SUBMIT DESIGN PLANS TO THE OWNER FOR REVIEW.

ELECTRICAL PLAN NOTES

1. PROVIDE MODIFICATIONS TO ELECTRICAL SYSTEM AS NEEDED IN RENOVATED AND NEWLY CONSTRUCTED AREA.
2. OWNER TO DETERMINE LOCATIONS AND NUMBERS OF LIGHT FIXTURES AND SWITCHES, AND DESIRED POWER OUTLET LAYOUT.
3. SUBMIT DESIGN PLANS TO THE OWNER FOR REVIEW.

FINISH NOTES

1. FINISH MATERIALS AND COLORS AS SELECTED BY OWNER.
2. EXTERIOR AND INTERIOR FINISH DETAILS AND INTERIOR CASEWORK TO BE DETERMINED BY OWNER.
3. DOOR STYLES AS SELECTED BY OWNER. DOOR SIZES AS NOTED ON FLOOR PLAN. INTERIOR DOORS - MATCH HEIGHT OF EXISTING.
4. WINDOWS IN EXISTING OPENINGS: MARVIN CLAD WOOD DOUBLE HUNG, TO FIT OPENING. NEW WINDOWS: MARVIN CLAD WOOD DOUBLE HUNG, SIZED TO MATCH SIMILAR EXISTING WINDOWS. STYLE AND FINISH OF WINDOWS TO BE SELECTED BY OWNER. PROVIDE FULL SCREENS FOR ALL WINDOWS.

PARTITIONS/WALLS KEY

EXISTING TO REMAIN

NEW PARTITION/WALL

Michael R. Charek Architect

25 Hartley Street
Portland, Maine 04103
(207) 7616556

Morgan Residence Renovation & Addition

140 Noyes Street
Portland, Maine

Title

BASEMENT FLOOR PLAN

Scale: 1/4" = 1'-0"

Date: 10/31/05

Revisions

Sheet

A1

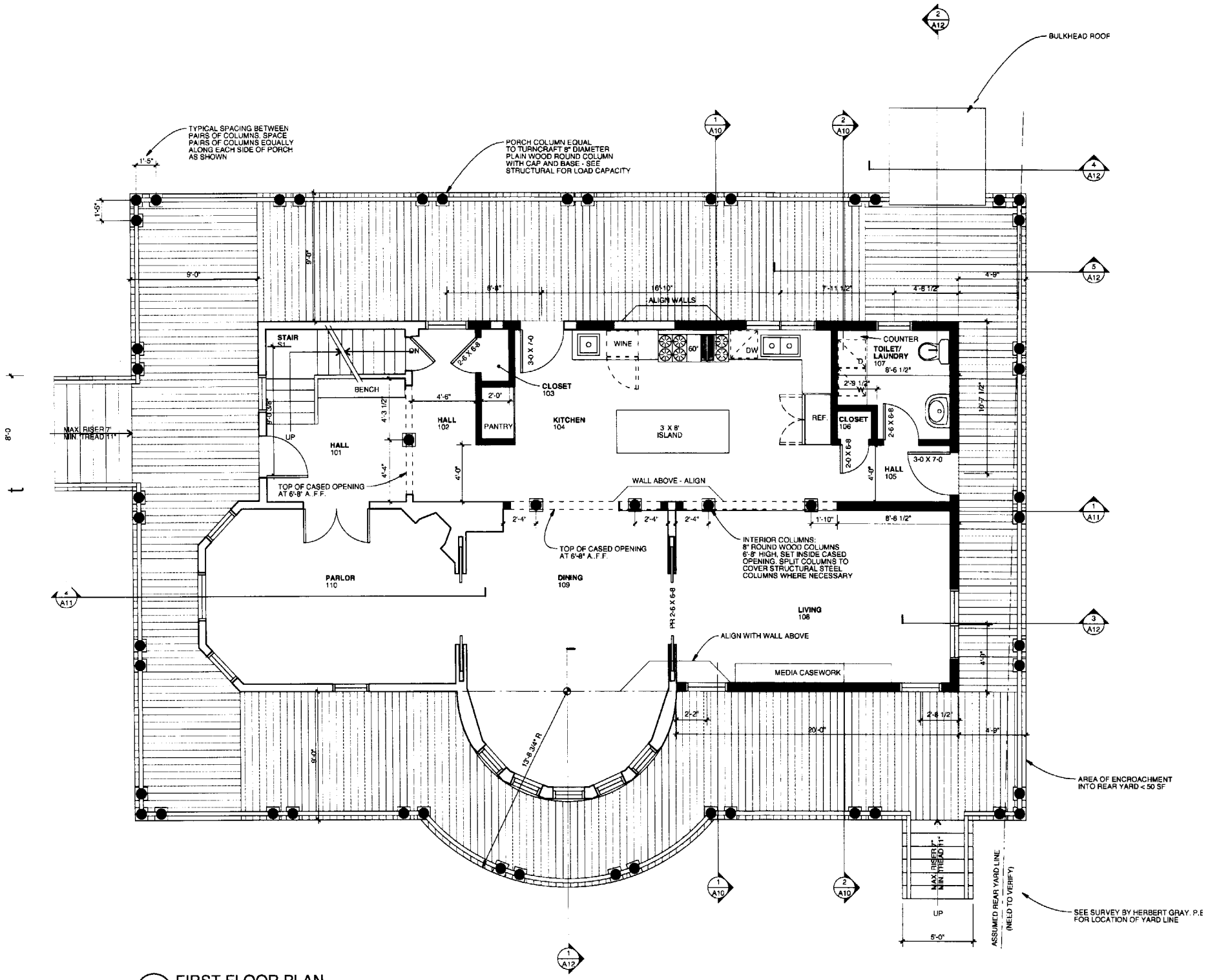

1 FIRST FLOOR PLAN
SCALE: 1/4" = 1'-0"

PARTITIONS/WALLS KEY
EXISTING TO REMAIN
NEW PARTITION/WALL

Michael R. Charek
Architect
25 Hartley Street
Portland, Maine 04103
(207) 761-0556

Morgan Residence
Renovation & Addition
140 Noyes Street
Portland, Maine

Title
FIRST FLOOR PLAN

Scale: 1/4" = 1'-0"

Date: 10/31/05

Revisions

Sheet
A2

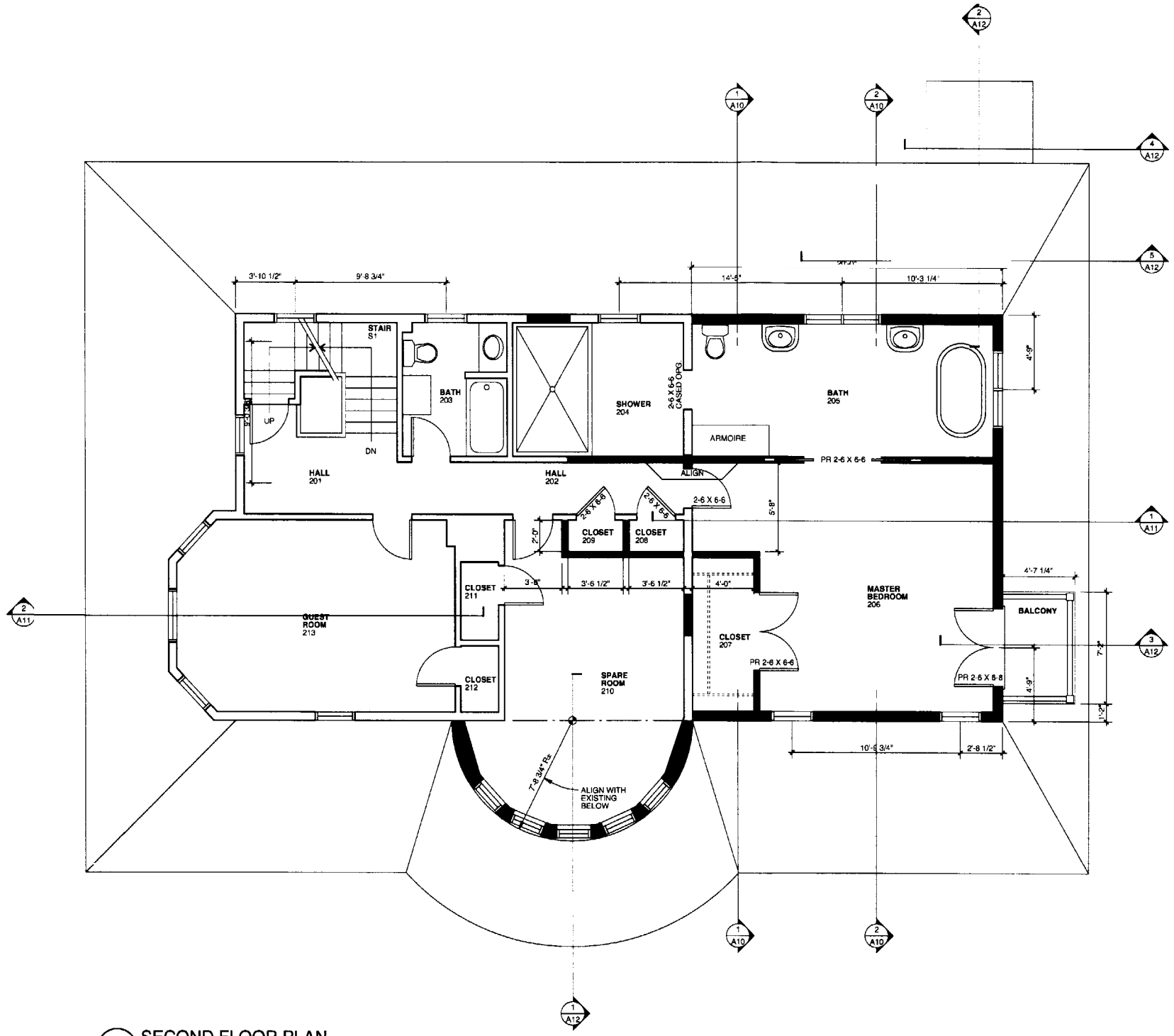

1 SECOND FLOOR PLAN
SCALE: 1/4" = 1'-0"

PARTITIONS/WALLS KEY
EXISTING TO REMAIN
NEW PARTITION/WALL

© 2005 Michael R. Charek Architect

Michael R. Charek
Architect
25 Hartley Street
Portland, Maine 04103
(207) 7614556

Morgan Residence
Renovation & Addition
140 Noyes Street
Portland, Maine

Title
SECOND
FLOOR PLAN

Scale: 1/4" = 1'-0"

Date: 10/31/05

Revisions

Sheet
A3

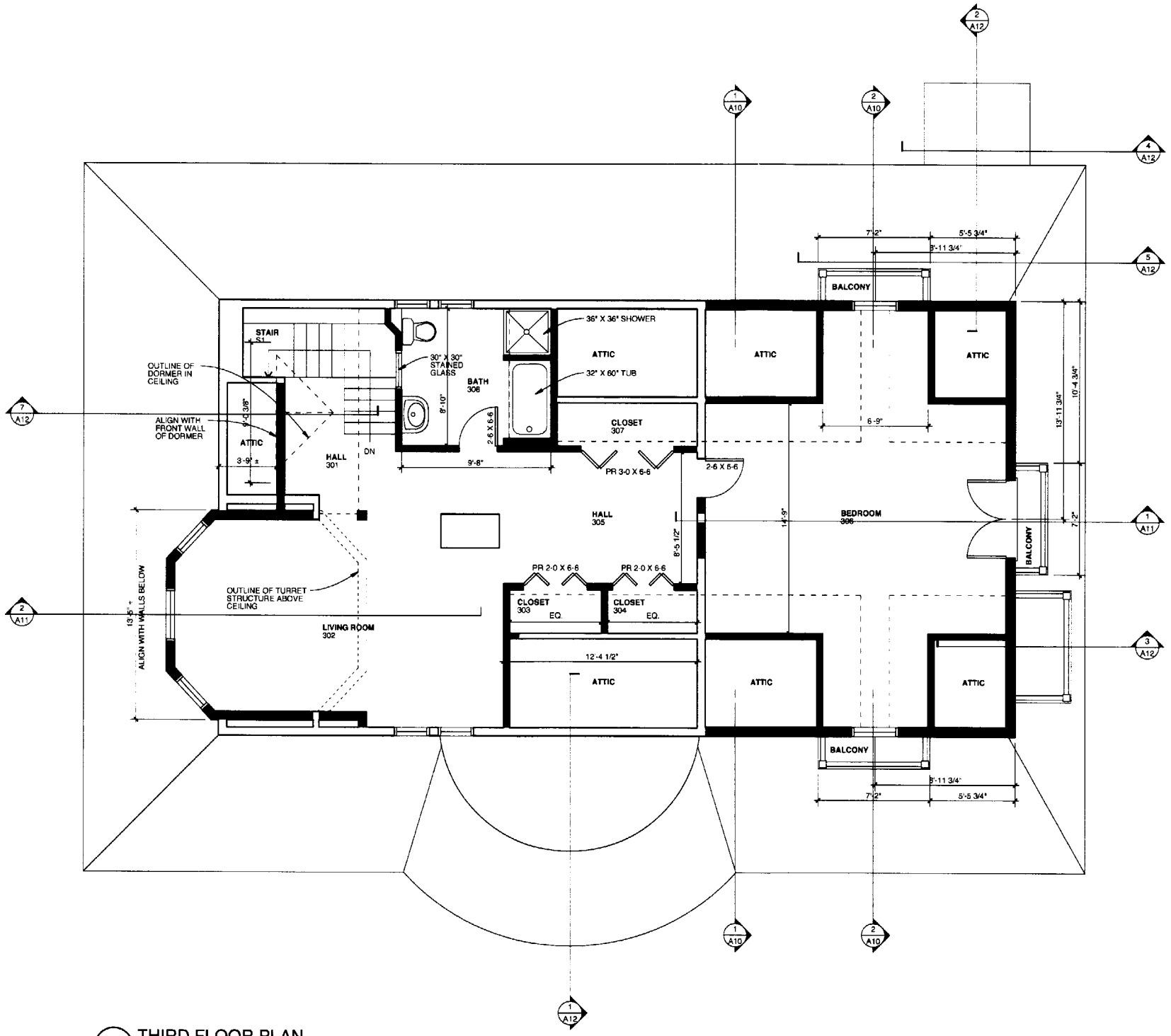

1 THIRD FLOOR PLAN
SCALE: 1/4" = 1'-0"

PARTITIONS/WALLS KEY
EXISTING TO REMAIN
NEW PARTITION/WALL

© 2005 Michael R. Charek, Architect

Michael R. Charek
Architect
25 Hartley Street
Portland, Maine 04103
(207) 761-0556

Morgan Residence
Renovation & Addition
140 Noyes Street
Portland, Maine

Title
THIRD FLOOR PLAN

Scale: 1/4" = 1'-0"

Date: 10/31/05

Revisions

Sheet
A4