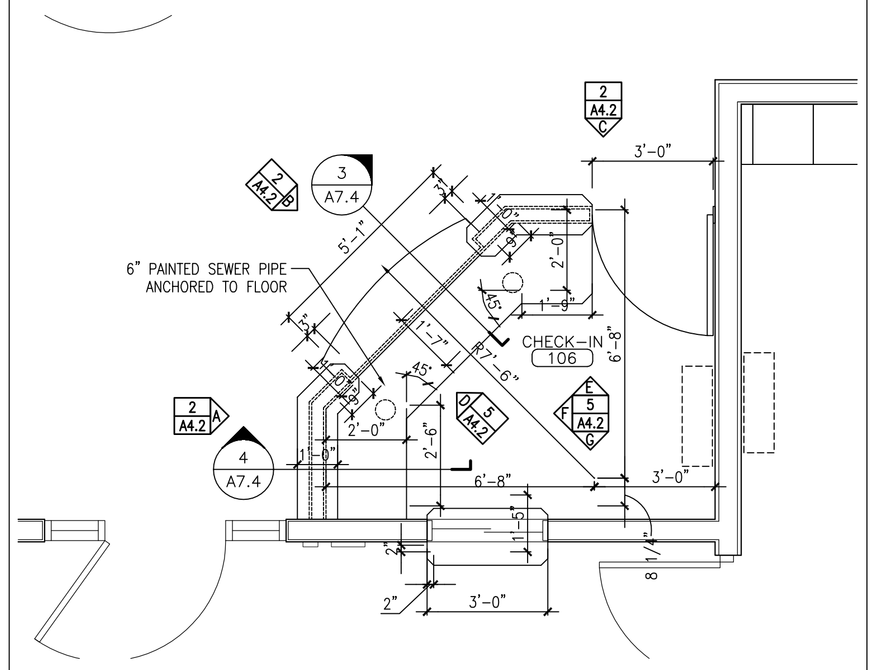

1 ENLARGED PLAN @ CHECK-IN

SCALE: 3/8" = 1'-0"

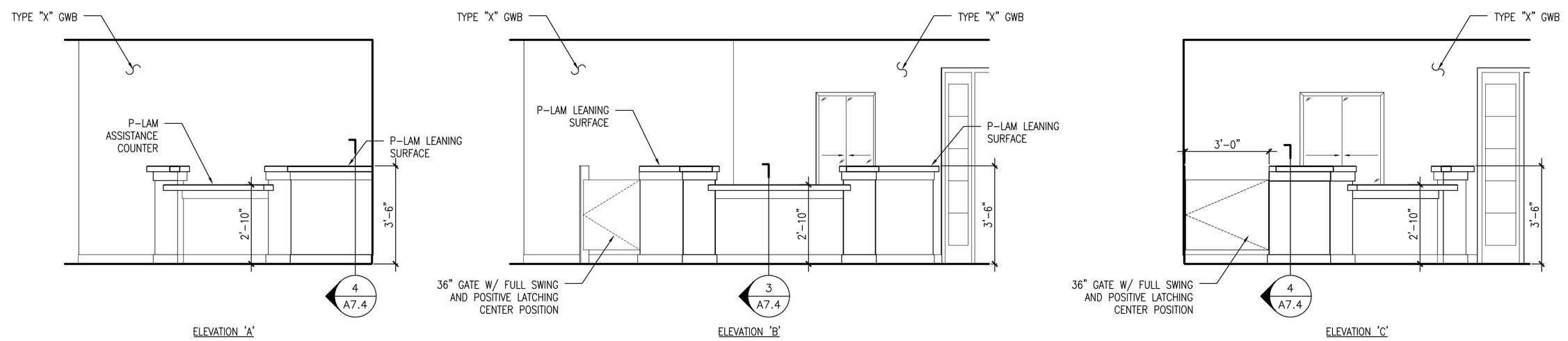

2 INTERIOR ELEVATIONS @ CHECK-IN

SCALE: 3/8" = 1'-0"

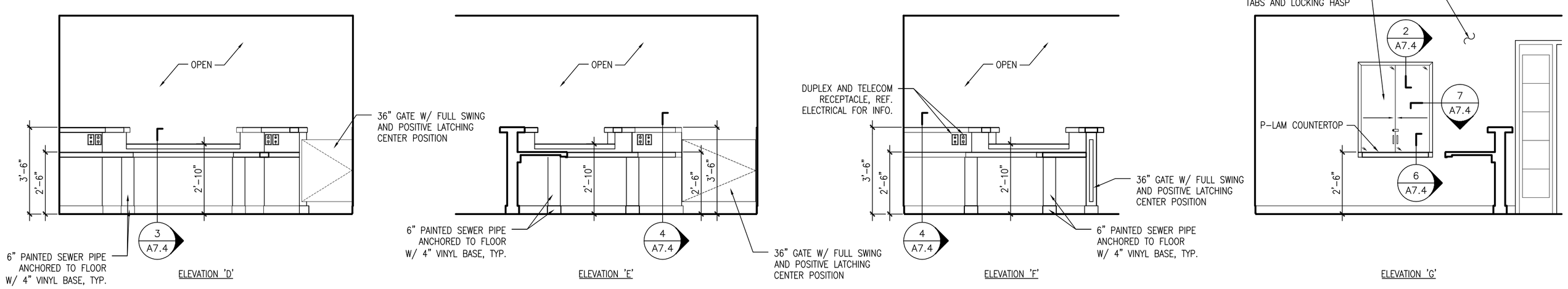

5 INTERIOR ELEVATIONS @ CHECK-IN

SCALE:

NOTE:
THE AUTOMATIC DOOR REOPENING DEVICE IS ACTIVATED IF AN OBJECT PASSES THROUGH EITHER LINE A OR LINE B. LINE A AND LINE B REPRESENT THE VERTICAL LOCATIONS OF THE DOOR REOPENING DEVICE NOT REQUIRING CONTACT.

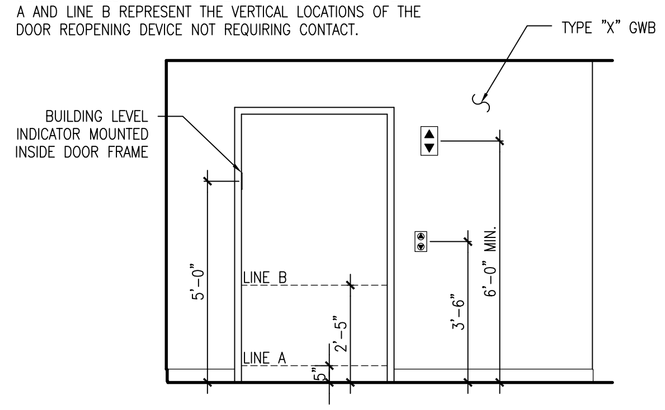

NOTE:
MOUNTING HEIGHTS SHOWN ARE SUGGESTED. FOLLOW MANUFACTURERS REQUIREMENTS FOR MOUNTING HEIGHTS.

8 TYP. INTERIOR ELEVATION @ ELEVATOR

SCALE: 3/8" = 1'-0"

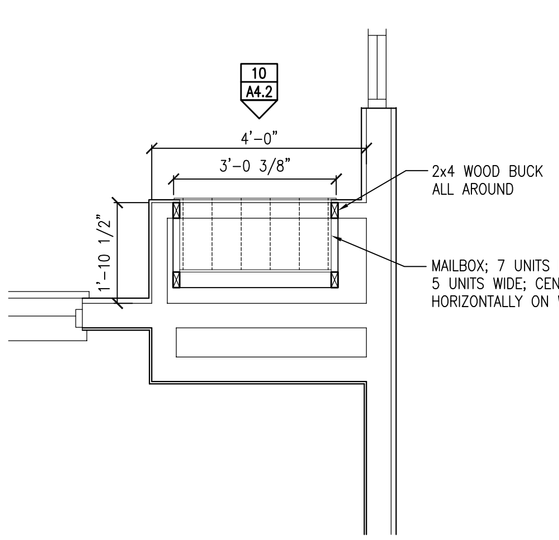

9 ENLARGED PLAN @ MAIL (103)

SCALE: 1/2" = 1'-0"

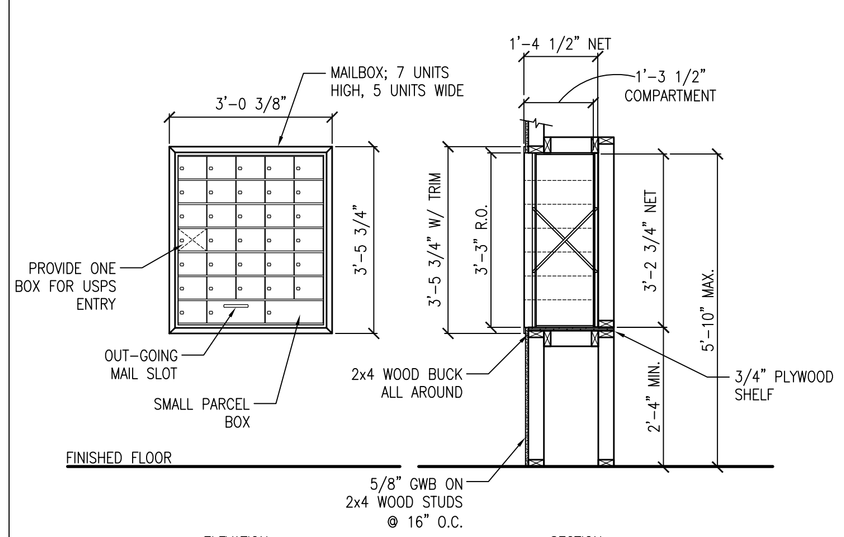

10 MAILBOX ELEVATION AND SECTION

SCALE: 1/2" = 1'-0"

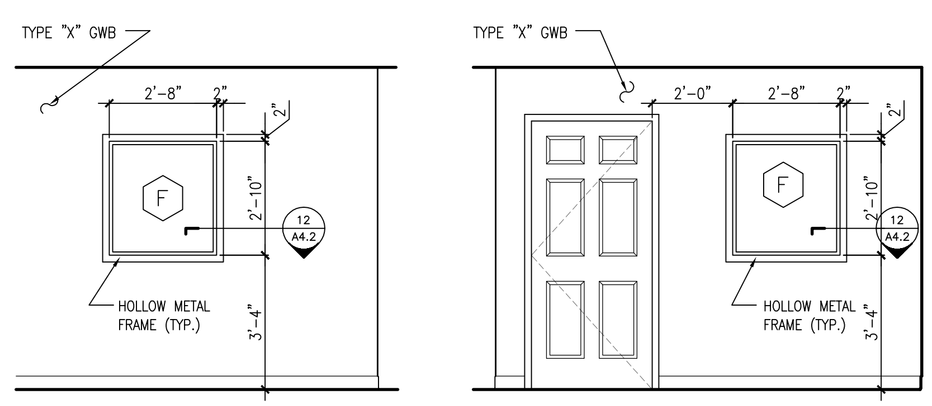

11 INTERIOR ELEVATIONS @ STAFF OFFICE (203)

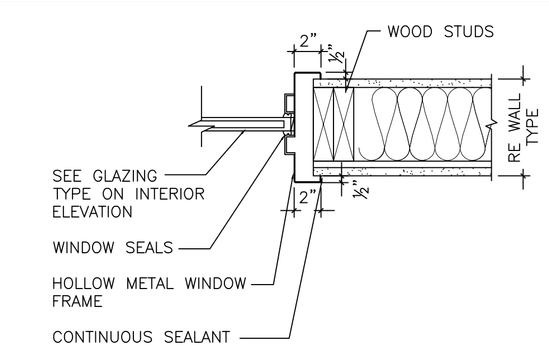

12 H.M. WINDOW FRAME

SCALE: 1 1/2" = 1'-0"

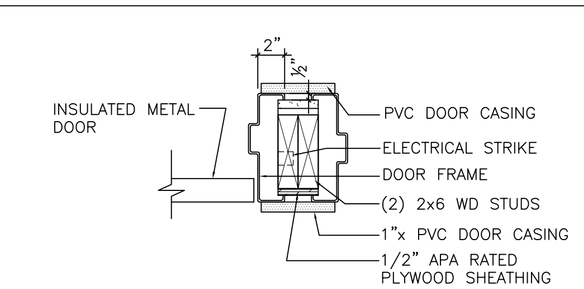

13 TYP. DOOR JAMB @ DOOR # 101A & 101B

SCALE: 1 1/2" = 1'-0"

CWS Architects

Architecture
Space Planning
Value Design

434 Cumberland Avenue
Portland, ME 04101
Phone: (207)774-4441
Fax: (207)774-4016
www.CWSarch.com

Owner:
YC PORTLAND L.P.
C/O AVESTA
307 CUMBERLAND AVE.
PORTLAND, MAINE 04101
(207) 553-7777

Client:
YORK-CUMBERLAND
HOUSING DEVELOPMENT

LOGAN PLACE
PORTLAND, MAINE

Project No: 01.409 SRO

Drawing Title:
ENLARGED PLAN AND INTERIOR ELEVATIONS

Scale: AS NOTED
Date: JANUARY 14, 2004
Revisions:

Drawing Number:
A4.2