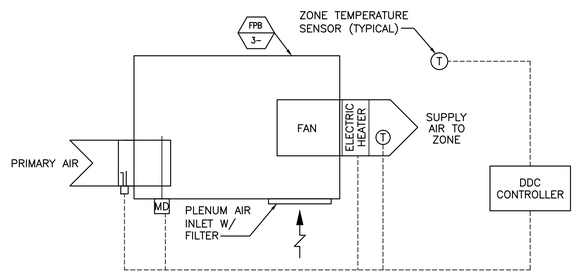

SERIES FAN–POWERED VARIABLE AIR VOLUME BOX SEQUENCE OF OPERATION

1. VAV CONTROL: DUAL TEMPERATURE THERMOSTAT SET AT 75'F (ADJUSTABLE) MAINTAINS CONSTANT SPACE TEMPERATURE BY MODULATING THE PRIMARY AIR DAMPER. ON A RISE OF TEMPERATURE ABOVE THE COOLING SET POINT (75'F ADJUSTABLE), THE PRIMARY AIR DAMPER SHALL MODULATE TO ITS MAXIMUM CFM. AS THE TEMPERATURE DROPS BELOW THE COOLING SET POINT, PRIMARY AIR DAMPER SHALL MODULATE TO ITS MINIMUM CFM. AS THE SPACE TEMPERATURE CONTINUES TO FALL TO THE HEATING SET POINT (70'F ADJUSTABLE), THE ELECTRIC HEATER SHALL MODULATE TO MAINTAIN THE SPACE TEMPERATURE SETPOINT. FAN SHALL OPERATE CONTINUOUSLY DURING OCCUPIED HOURS. FAN SHALL OPERATE ONLY ON A CALL FOR COOLING OR HEATING DURING UNOCCUPIED HOURS.

E1 SERIES FAN–POWERED VAV BOX SCHEMATIC

NOT TO SCALE

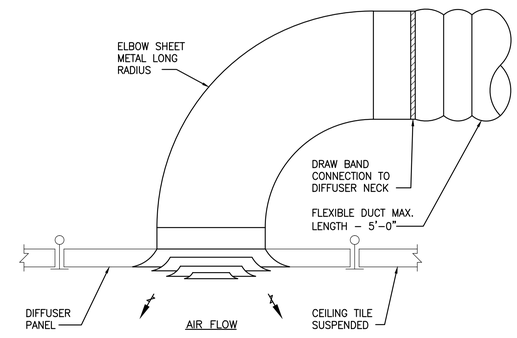

F7 DIFFUSER CONNECTION DETAIL

NOT TO SCALE

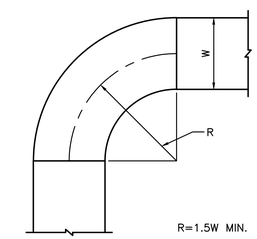

RADIUS ELBOW
N.T.S.

F12 LOW PRESSURE DUCT ELBOWS

NOT TO SCALE

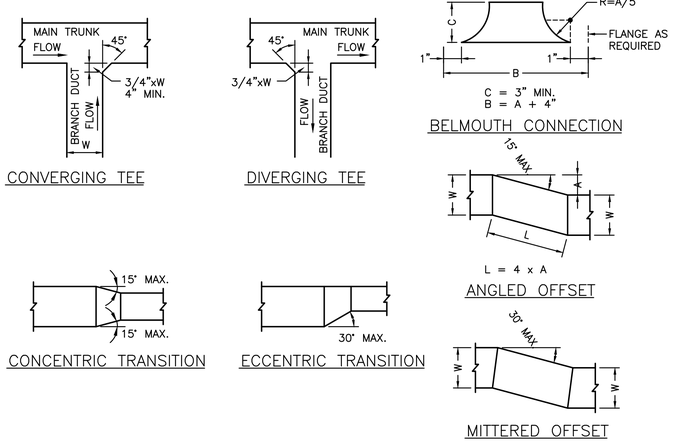

A1 DUCT TRANSITIONS

NOT TO SCALE

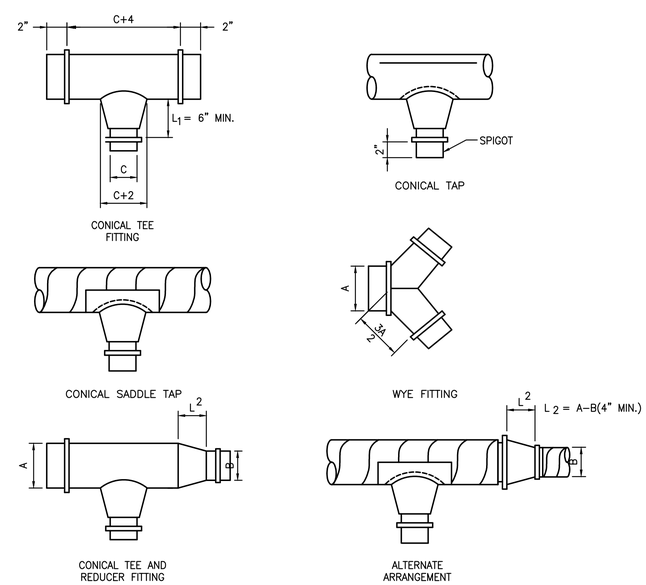

A7 CONICAL TEES

NOT TO SCALE

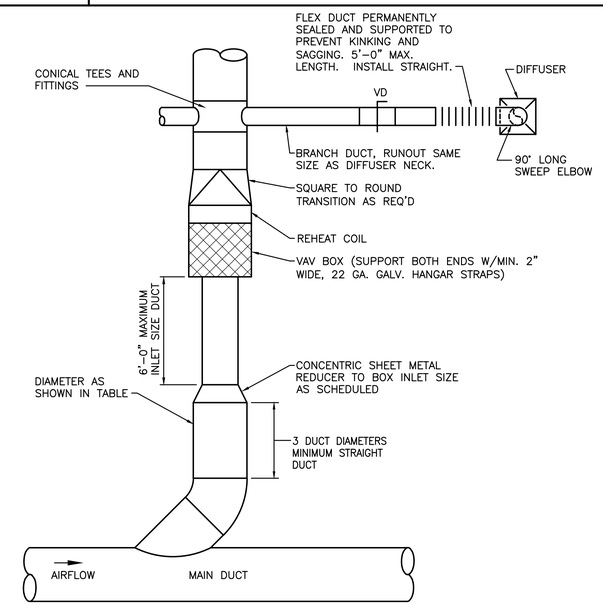

A12 VAV BOX SCHEMATIC

NOT TO SCALE

SMRT
ARCHITECTURE
ENGINEERING
PLANNING
INTERIOR DESIGN
COMMISSIONING
144 Fore Street/P.O. Box 618
Portland, Maine 04104
tel. (207) 772–3846
fax. (207) 772–1070
www.smrtinc.com

SUITE 390 FIT–UP
PORTLAND, ME

PERMIT SET
07/28/14

CURRENT ISSUE STATUS:

REV	DESCRIPTION	DATE

GRAPHIC SCALE: 0" 1"

SCALE:	NOT TO SCALE
PROJECT MANAGER:	CDP
JC/DRAWN BY:	KPB
A/E OF RECORD:	CJM
CAD FILE:	M–501–13062
PROJECT NO:	13162
DATE:	

SHEET TITLE:
MECHANICAL SCHEDULES AND DETAILS

SHEET No.
M–501

© COPYRIGHT 2014 SMRT INC.