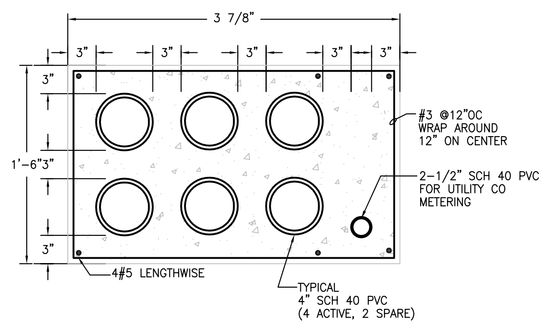

1 SECONDARY SERVICE DUCT BANK

SCALE: NOT TO SCALE

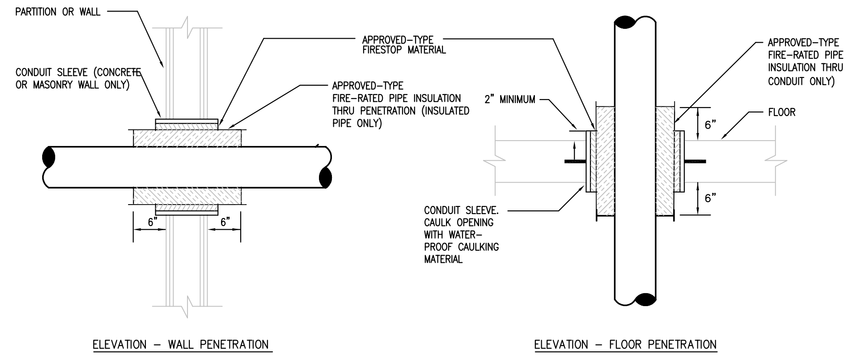

NOTE: BEFORE STARTING WORK, CONTRACTOR MUST VERIFY, WITH ARCHITECTURAL PLANS, ALL LOCATIONS IN BUILDING WHICH HAVE FIRE-RATED WALLS AND FLOORS, REQUIRING THE PENETRATION METHODS SHOWN ABOVE.

2 THRU WALL AND FLOOR PENETRATION

SCALE: NOT TO SCALE

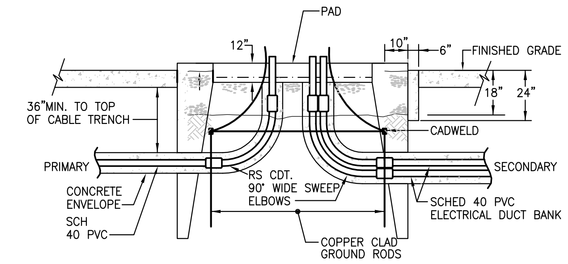

NOTES:
1. COORDINATE ALL DIMENSIONS INCLUDING CONDUIT WINDOW OPENINGS WITH CENTRAL MAINE POWER CO. REQUIREMENTS.
2. CONCRETE PAD SHALL BE IN ACCORDANCE WITH CENTRAL MAINE POWER CO. STANDARDS

3 TRANSFORMER PAD DETAIL – SECTION VIEW

SCALE: NOT TO SCALE

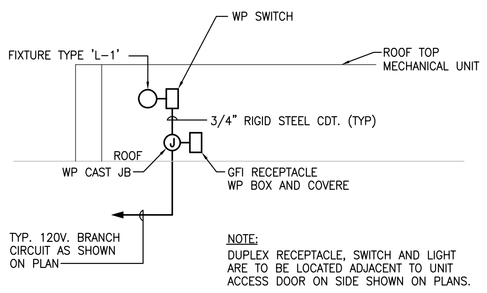

4 TYP. ROOF TOP MECH. UNIT LIGHT & POWER DETAIL

SCALE: NOT TO SCALE

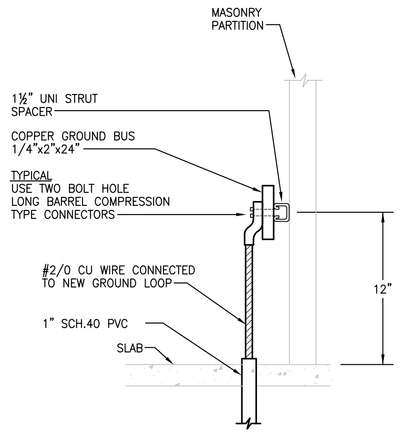

5 EQUIPMENT GROUND BUS DETAIL

SCALE: NTS

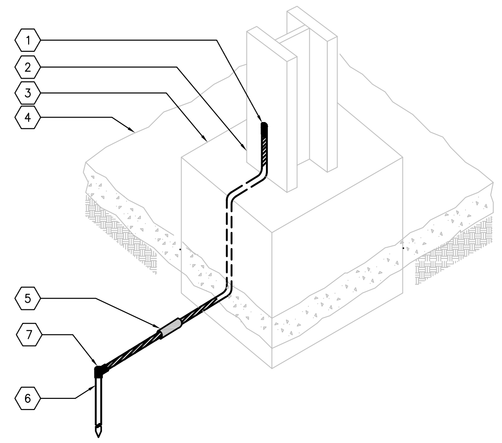

NOTES:
1. CABLE TO STEEL EXOTHERMIC WELD CONNECTION
2. COLUMN
3. COLUMN FOOTING
4. CONCRETE SLAB ON GRADE
5. CABLE TO CABLE EXOTHERMIC WELD CONNECTION
6. GROUND ROD
7. CABLE TO GROUND ROD EXOTHERMIC WELD CONNECTION

6 COLUMN BASE GROUNDING

SCALE: NOT TO SCALE

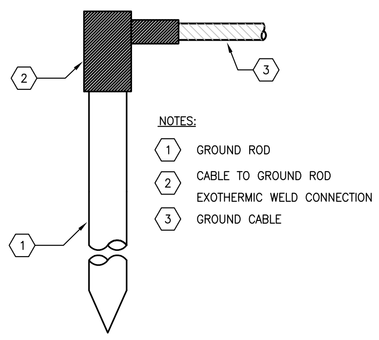

NOTES:
1. GROUND ROD
2. CABLE TO GROUND ROD EXOTHERMIC WELD CONNECTION
3. GROUND CABLE

7 GROUND ROD DETAIL

SCALE: NOT TO SCALE

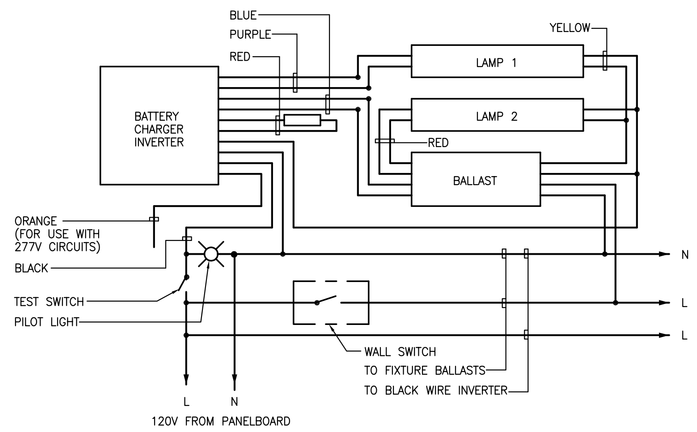

8 FLUORESCENT BATTERY UNIT

SCALE: NOT TO SCALE

LANDMARK HEALTHCARE FACILITIES, LLC
839 North Jefferson Street
Milwaukee, Wisconsin 53202
Telephone: (414) 277-0500
Facsimile: (414) 277-1055

Francis Cauffman Foley Hoffmann
Francis Cauffman Foley Hoffmann Architects Ltd.
2120 Arch Street
Philadelphia, PA 19103
215-568-8250

STRUCTURAL ENGINEER
ROBERT EDWARD CHESTER ASSOCIATES,
119 COULTER AVENUE
SUITE 175
ARDMORE, PA 19003
P (610) 645-9570
F (610) 645-9572

M/E/P ENGINEER
AKF engineers
1500 WALNUT STREET, SUITE 1400
PHILADELPHIA, PA 19102
215.735.7290 TEL 215.735.6706 FAX
AKF PROJ. NO. P060106
ARLINGTON • NEW YORK • PHILADELPHIA
PRINCETON • STAMFORD • MEXICO CITY

Revisions
11-20-06 CONSTRUCTION DOCUMENTS ISSUED

Sheet
ELECTRICAL DETAILS

Project Title
Landmark Healthcare Facilities LLC

Fore River Medical Pavillon
Portland, Maine

Date
NOVEMBER 20, 2006

Project Number
F06-5103

Drawing Number
E6.00