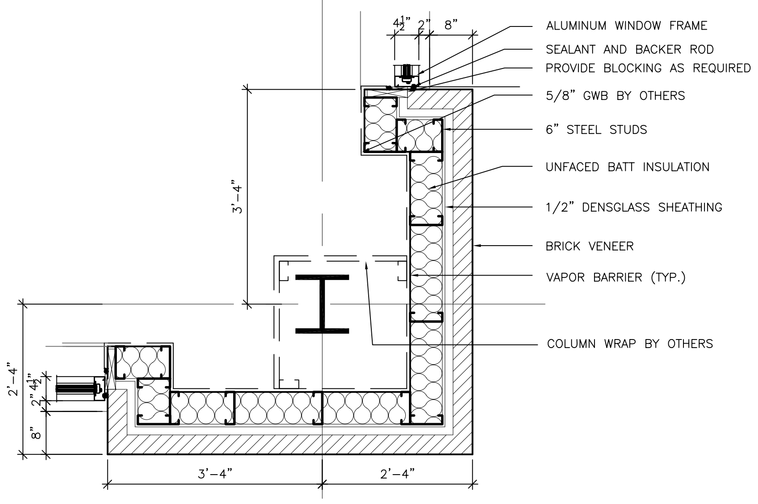

1 A8.03 PLAN DETAIL 3/4"=1'-0"

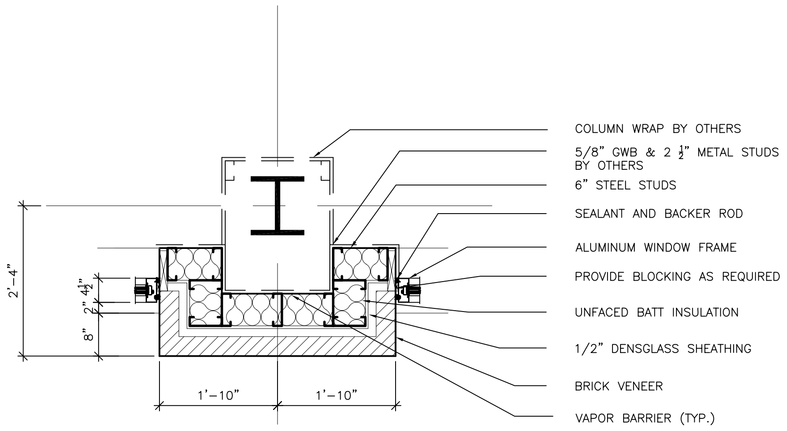

2 A8.03 PLAN DETAIL 3/4"=1'-0"

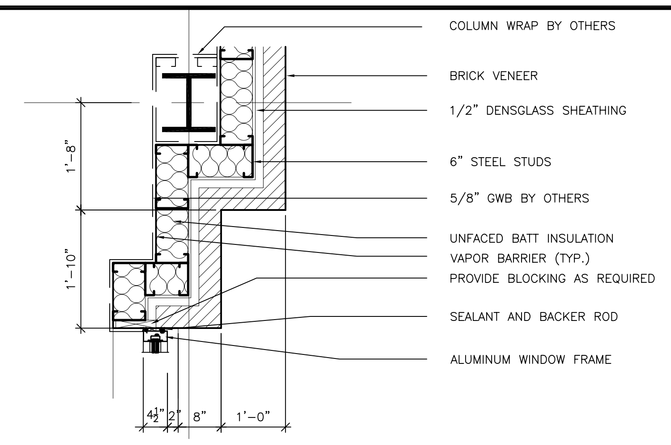

3 A8.03 PLAN DETAIL 3/4"=1'-0"

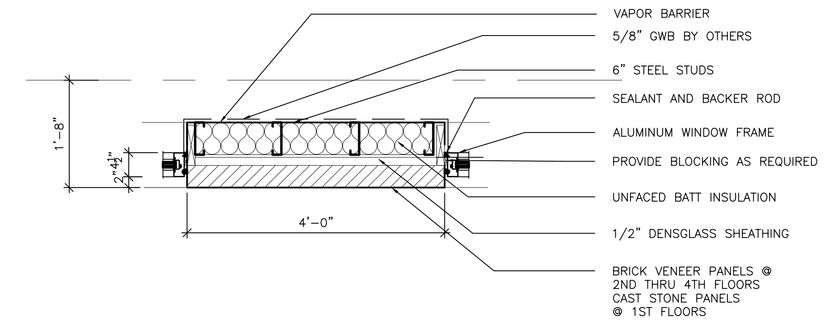

4 A8.03 PLAN DETAIL 3/4"=1'-0"

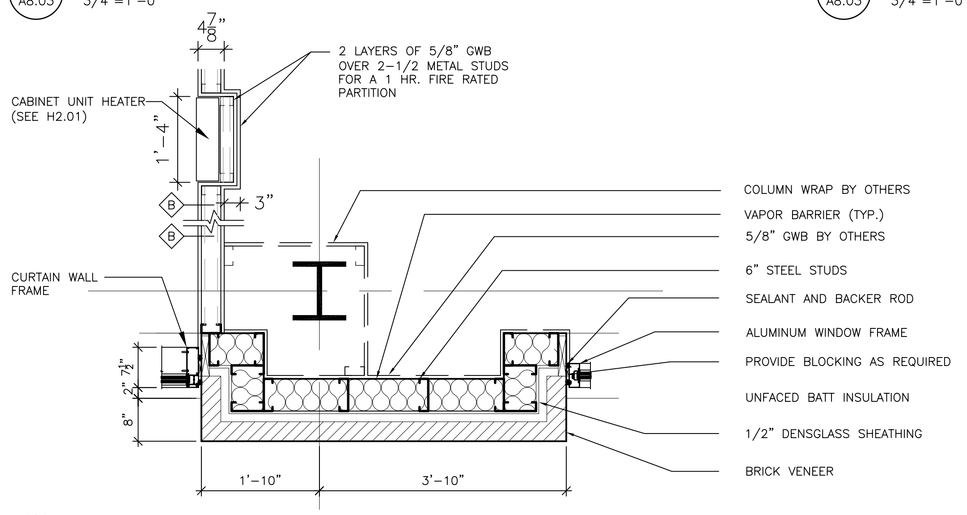

5 A8.03 PLAN DETAIL 3/4"=1'-0"

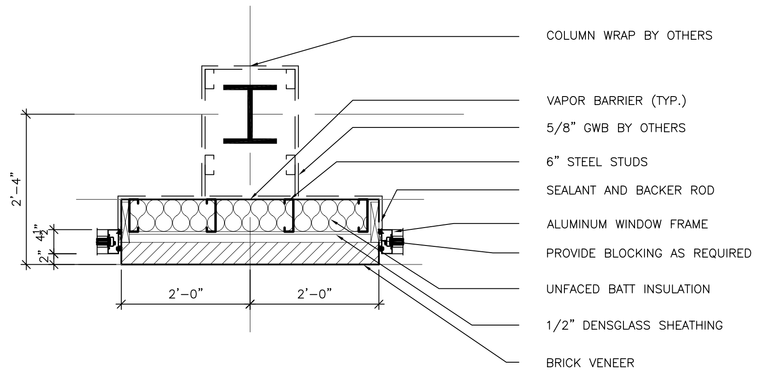

6 A8.03 PLAN DETAIL 3/4"=1'-0"

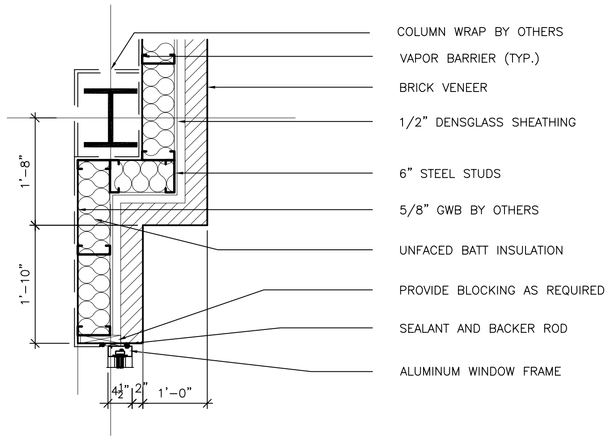

7 A8.03 PLAN DETAIL 3/4"=1'-0"

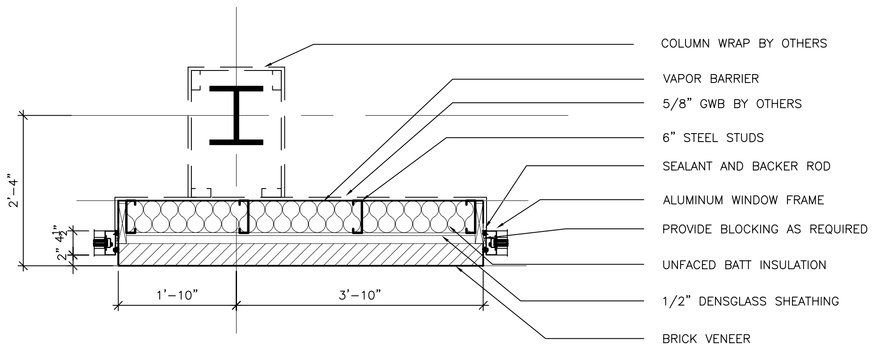

8 A8.03 PLAN DETAIL 3/4"=1'-0"

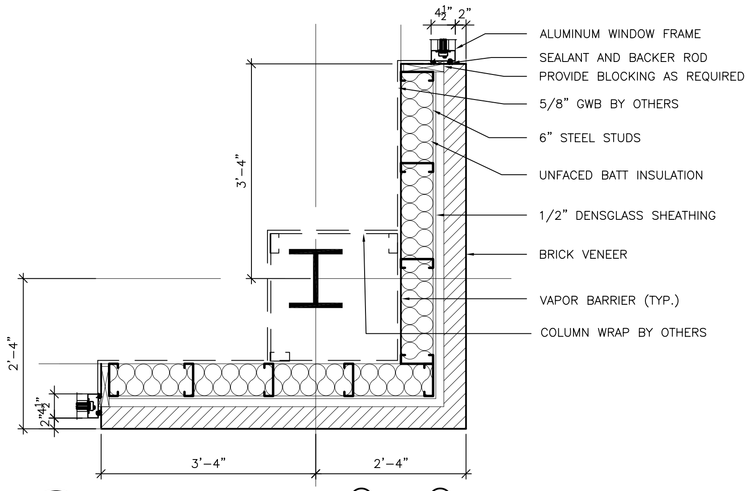

9 A8.03 PLAN DETAIL 3/4"=1'-0"

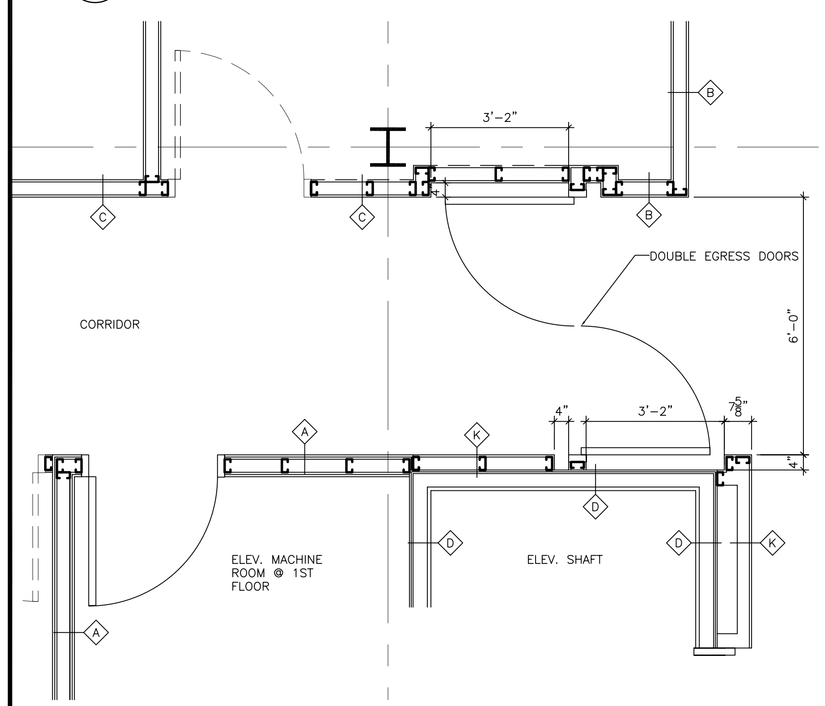

10 A8.03 PLAN DETAIL @ DOUBLE EGRESS DOORS 1/2"=1'-0"

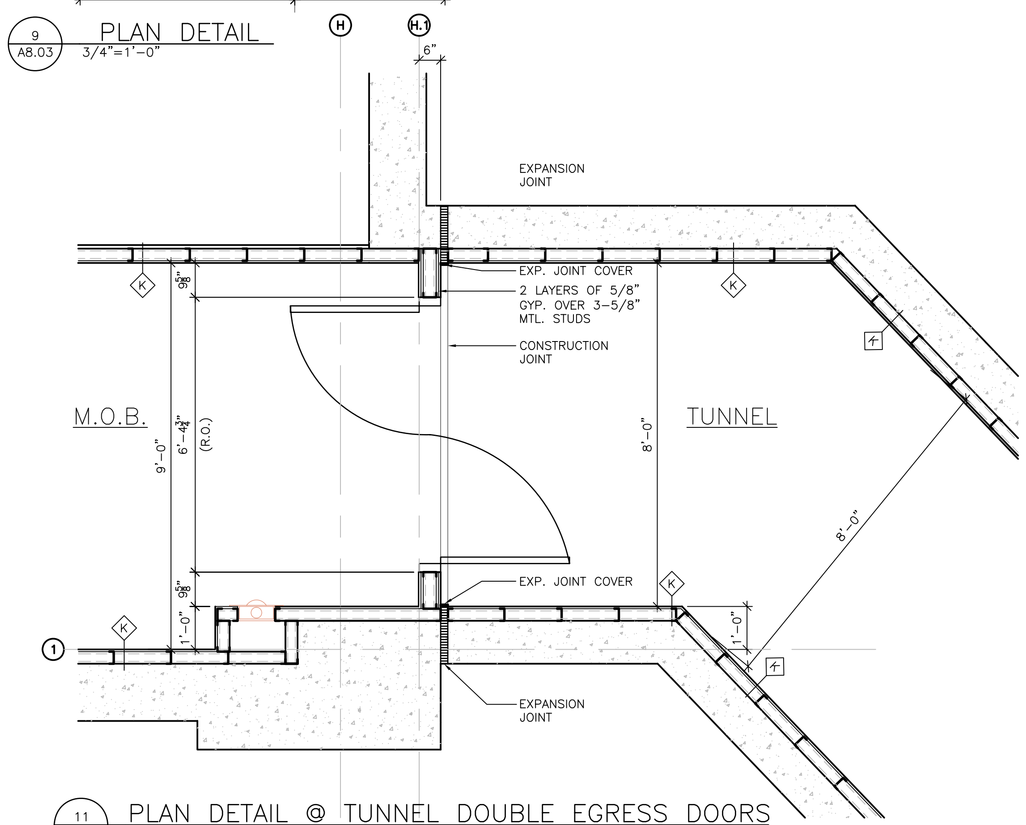

11 A8.03 PLAN DETAIL @ TUNNEL DOUBLE EGRESS DOORS 1/2"=1'-0"

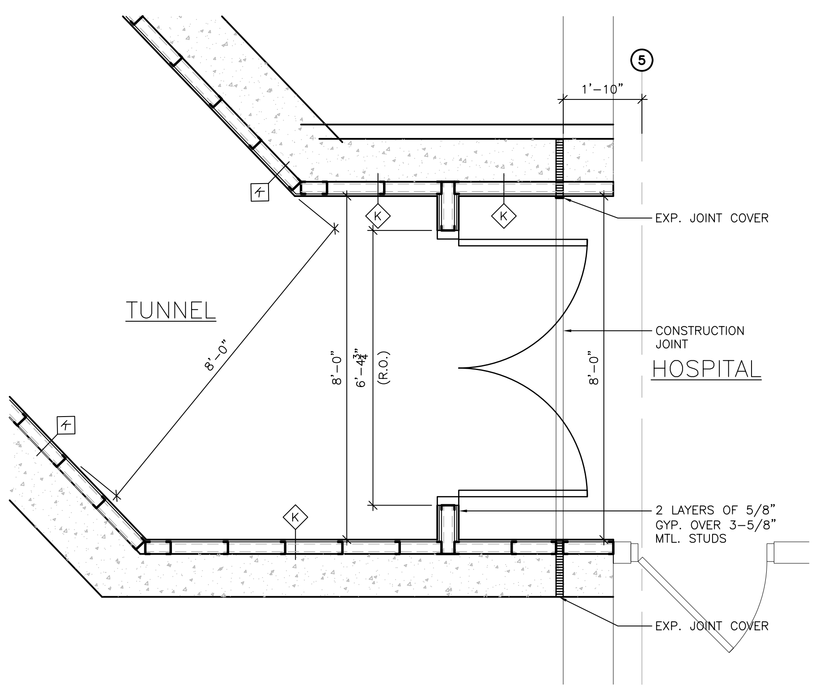

12 A8.03 PLAN DETAIL @ TUNNEL DOUBLE EGRESS DOORS 1/2"=1'-0"

LANDMARK HEALTHCARE FACILITIES, LLC
839 North Jefferson Street
Milwaukee, Wisconsin 53202
Telephone: (414) 277-0500
Facsimile: (414) 277-1055

Francis Cauffman Foley Hoffmann

Francis Cauffman Foley Hoffmann Architects Ltd.
2120 Arch Street
Philadelphia, PA 19103
215-568-8250

STRUCTURAL ENGINEER
ROBERT EDWARD CHESTER ASSOCIATES,
119 COULTER AVENUE
SUITE 175
ARDMORE, PA 19003
P (610) 645-9570
F (610) 645-9572

M/E/P ENGINEER
AKF ENGINEERS, LLP
1500 WALNUT STREET, SUITE 1400
PHILADELPHIA, PA 19102
P 215-282-2154
F 215-735-6706

Revisions
11-20-06 CONSTRUCTION DOCUMENTS ISSUED

Sheet
PLAN DETAILS

Project Title
Landmark Healthcare Facilities LLC

Fore River Medical Pavillon
Portland, Maine

Date
NOVEMBER 20, 2006

Project Number
F06-5103

Drawing Number
A8.03