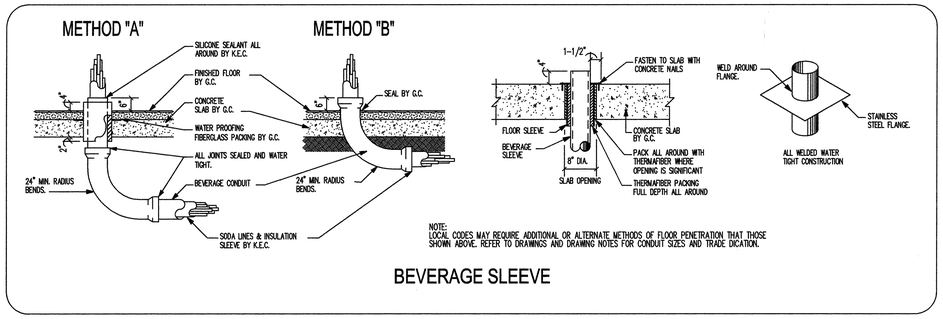

BEVERAGE SLEEVE

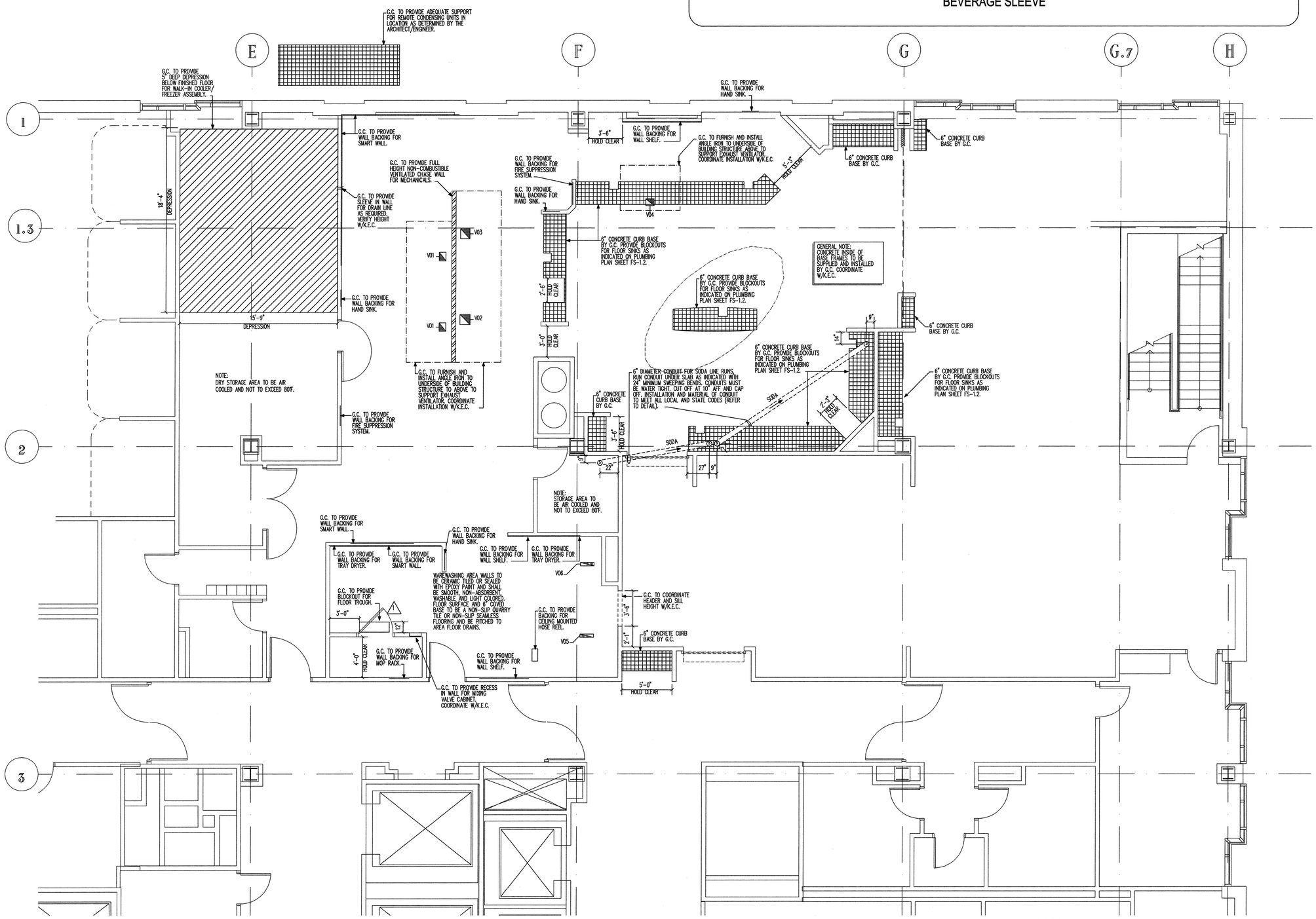

NOTE:
THIS DRAWING INDICATES THE GENERAL EXTENT OF THE WORK AND IS NOT INTENDED TO INDICATE OR DESCRIBE ANY AND ALL WORK REQUIRED FOR THE FULL PERFORMANCE AND COMPLETION OF THE REQUIREMENTS OF THE CONTRACT DOCUMENTS.

FINAL-ISSUED FOR CONSTRUCTION

Inman Foodservices Group, LLC
MIAMI
1330 Coral Way
Suite 310
Miami, Florida
33145
(305) 859-2025
NASHVILLE
3807 Charlotte Avenue
Nashville, Tennessee
37209
(615) 321-5591

PO Box 213 (Mailing)
4140 HWY 30 West
Ammille, KY 40402
Phone (606)-364-2888
Fax (606)-364-5100
E-Mail: eric@emmengineers.com
Web Address: emmengineers.com

Project:
MERCY HEALTH SYSTEM OF MAINE
PORTLAND, MAINE

Revisions:
1
2

Job Number: 04166
Date: 03-19-2007
Drawn By: STAFF
Checked By: STAFF
SCALE: 1/4" = 1'-0"

This drawing and the design is the property of Inman Associates, Inc. The reproduction, copying or use of this drawing without written consent is prohibited and any infringement will be subject to legal action.

SPECIAL CONDITIONS PLAN

Sheet FS-1.4