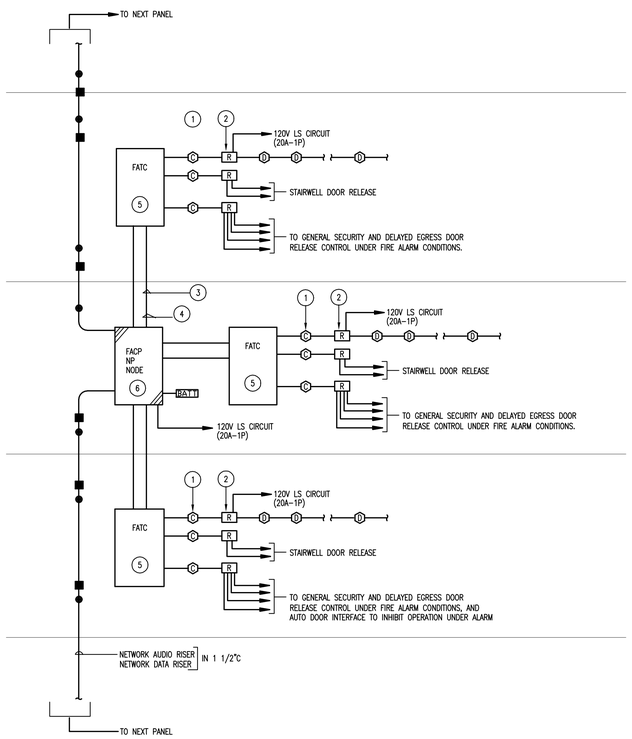


1. ON EACH FLOOR LEVEL PROVIDE (3) CONTROL MODULES FOR SMOKE DOOR RELEASE, STAIR DOOR RELEASE, AND WON FIRE PARTITION RELEASE. REFER TO PLANS FOR OTHER REMOTE LOCATED CONTROL MODULES. LOCATE AT FATC
2. PROVIDE RELAY MODULES CONTROLLED FROM ADDRESSABLE CONTROL MODULES 24DC CONTROL VOLTAGE. EACH RELAY SHALL BE PROVIDE WITH (4) RELAYS CONSISTING OF (1) N.O., (1) N.C. SWITCHING CONTACT.
3. 1 1/2" RISER CONDUIT FOR AUDIO EVAC CABLES.
4. 1 1/2 RISER CONDUIT FOR ADDRESSABLE INITIATION CIRCUITS.
5. FIRE ALARM TERMINAL CABINET.
6. FIRE ALARM CONTROL PANEL NETWORK MODE.

TYPICAL FIRE ALARM PANEL DETAIL

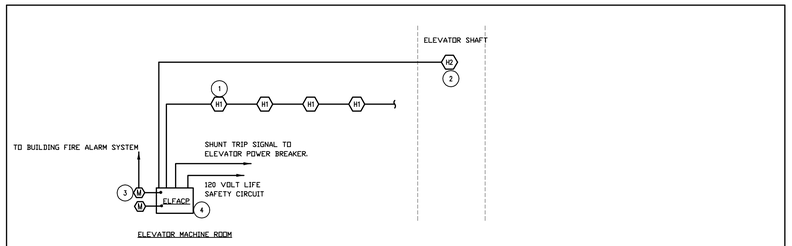


KEY NOTES:

1. HEAT DETECTOR FIXED TEMPERATURE 135°F LOCATE ADJACENT TO EACH SPRINKLER HEAD. COORDINATE NUMBER REQUIRED BASED ON SPRINKLER HEAD LAYOUT.
2. HEAT DETECTOR FIXED TEMPERATURE 200°F LOCATE AT THE TOP OF ELEVATOR SHAFT
3. MONITOR ZAMS TO MONITOR PANEL TROUBLE AND ALARM
4. SINGLE ZONE FIRE ALARM PANEL FOR ELEVATOR MACHINE ROOM. PROVIDE SEPARATE SYSTEM FOR EACH MACHINE ROOM.

SEQUENCE OF OPERATION

1 HEAT DETECTORS LOCATED IN ELEVATOR MACHINE ROOM AND ELEVATOR SHAFT IF ACTIVATED SHALL SEND A SIGNAL TO THE SHUNT TRIP BREAKER TO INTERRUPT POWER TO ELEVATORS.

2 HEAT DETECTORS SHALL HAVE A LOWER RESPONSE TIME AS COMPARED TO SPRINKLER HEADS.

13 ELEVATOR MACHINE ROOM FIRE DETECTION POWER SHUT DOWN

Revisions

1 Addendum #1 11/22/06

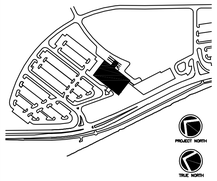


Consultant
CIVIL ENGINEER
DeLuca-Hoffman Associates, Inc.
778 Main Street, Suite 8
South Portland, ME 04106
Phone: (207) 775-1121
Fax:(207) 879-0896

Consultant
ASSOCIATE ARCHITECT/STRUCTURAL ENGINEER
SMRT
144 Fore Street P.O. Box 618
Portland, Maine 04104
Phone: (207) 772-3846
Fax: (207) 772-1070

Consultant
MECHANICAL/ELECTRICAL ENGINEER
Bard, Rao + Athanas Consulting Engineers, LLC
The Arsenal on the Charles
311 Arsenal Street
Watertown, MA 02472-5789
Phone: 617.254.0016
Fax: 617.924.9339

Consultant
EQUIPMENT PLANNING
Gene Burton & Associates
1893 General George Patton Drive
Franklin, Tennessee 37067
Phone: (615) 376-3100
Fax:(615) 376-3114

Consultant
CONSTRUCTION MANAGER
Gilbane Building Company
7 Jackson Walkway
Providence, Rhode Island 02903
Phone: (401) 456-5905
Fax: (401) 456-5516

Consultant
FOOD SERVICE
Inman Foodservice, LLC
1808 West End Ave. Suite 1400
Nashville, TN 37203
Phone: (615) 321-5591
Fax: (615) 321-5689

It is the responsibility of the Construction Manager/General Contractor and all Sub-Contractors to verify all dimensions and accept conditions of prior work by related trades before proceeding with any work.

Date
11/10/06 Final-Issued for Constructio

Drawn By

Scale
NONE

Francis

Cauffman

Foley

Hoffmann

Francis Cauffman
Foley Hoffmann
Architects Ltd.

2120 Arch Street
Philadelphia, PA 19103
215-568-8250

Project Title

Mercy Health Care
System of Maine

FORE RIVER SHORT
STAY HOSPITAL

MERCY

Project Number
F05-4898

Drawing Title and Number
ELECTRICAL
FIRE ALARM
DETAILS

E6-8

J:\JOBS\2523000.CW\ELEC\CWE-DETAILS-3.DWG 11-20-2006 10:49:31 - lmd