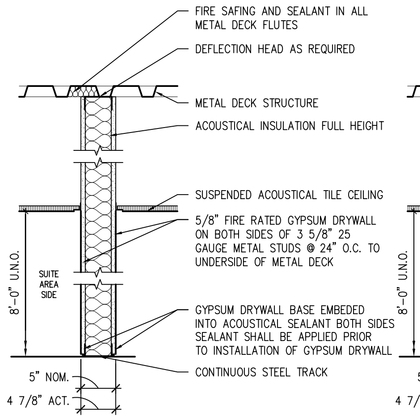

B ONE HOUR RATED PARTITION
SCALE: 1" = 1'-0"
MUST MEET UL NO. U465 OR EQUAL

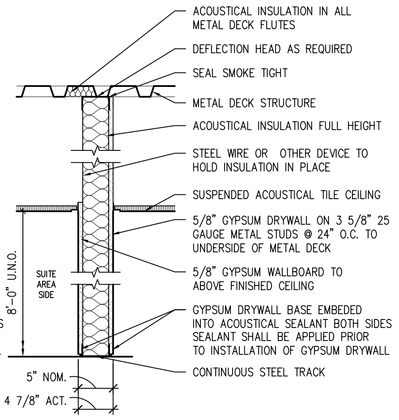

C FULL HEIGHT PARTITION
SCALE: 1" = 1'-0"

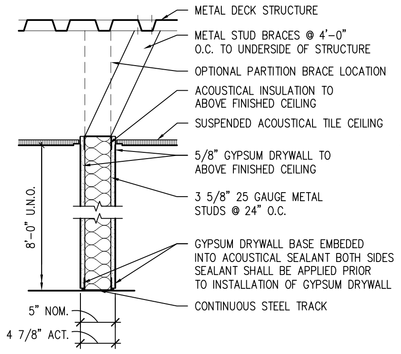

F CEILING HEIGHT INSULATED PARTITION
SCALE: 1" = 1'-0"

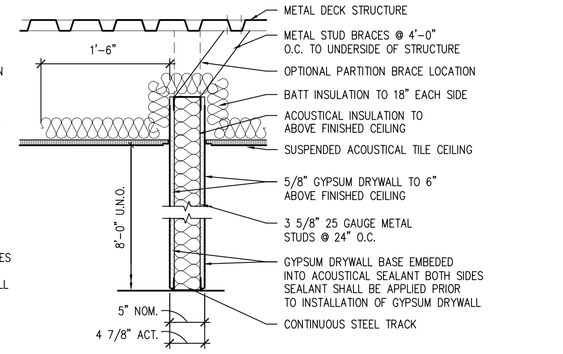

F1 CEILING HEIGHT INSULATED PARTITION
SCALE: 1" = 1'-0"

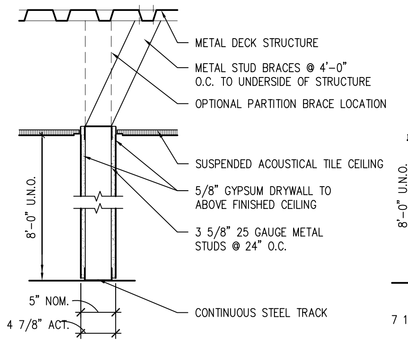

G CEILING HEIGHT PARTITION
SCALE: 1" = 1'-0"

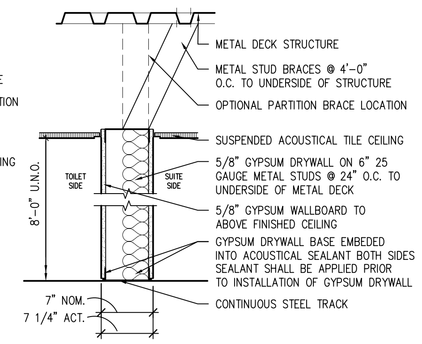

H FULL HEIGHT CHASE PARTITION
SCALE: 1" = 1'-0"

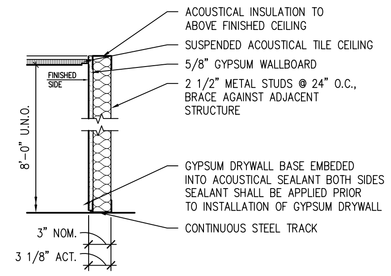

J INSULATED FURRING PARTITION
SCALE: 1" = 1'-0"

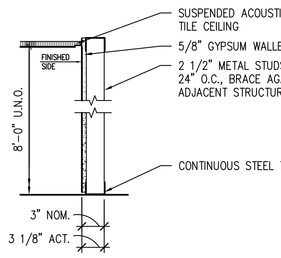

K FURRING PARTITION
SCALE: 1" = 1'-0"

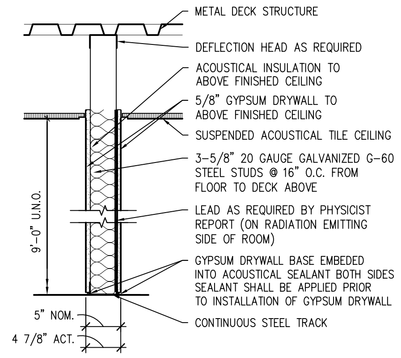

L LEAD LINED INSULATED PARTITION
SCALE: 1" = 1'-0"

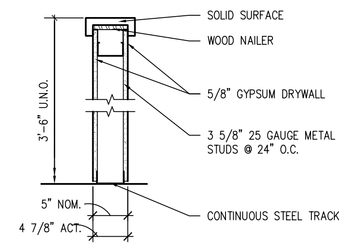

M HALF HEIGHT PARTITION
SCALE: 1" = 1'-0"

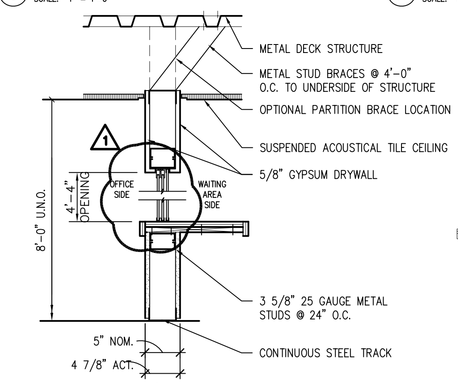

N CHECK-IN/CHECK-OUT PARTITION
SCALE: 1" = 1'-0"

NOTE:
SEE DETAIL 11/A10.3

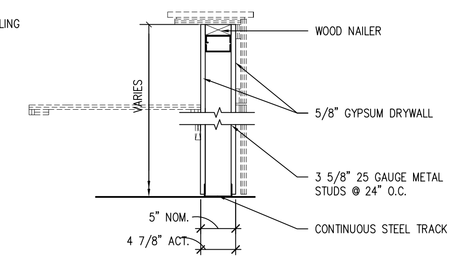

P NURSE COUNTER PARTITION
SCALE: 1" = 1'-0"

NOTE:
SEE DETAIL 12/A10.3

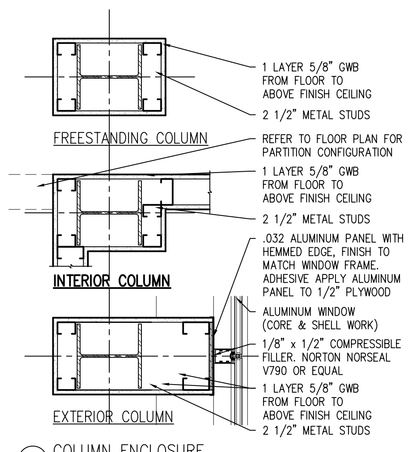

1 COLUMN ENCLOSURE
SCALE: 1" = 1'-0"

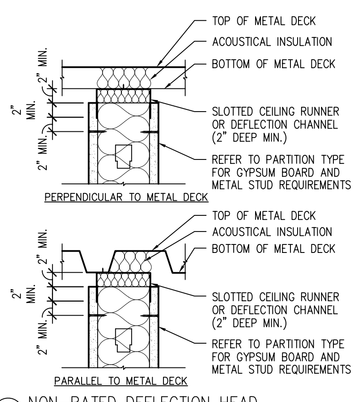

4 NON-RATED DEFLECTION HEAD
SCALE: 1" = 1'-0"

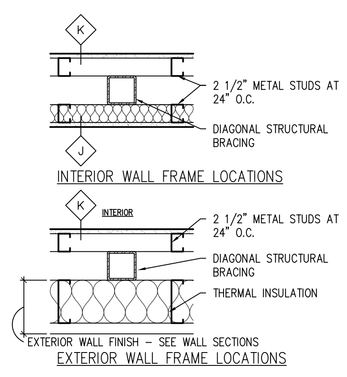

5 FINISH AT STRUCTURE BRACE FRAME
SCALE: 1" = 1'-0"

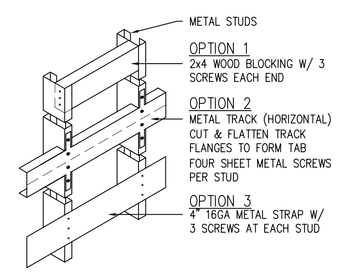

6 TYPICAL BLOCKING OPTIONS
SCALE: 1" = 1'-0"

Project North

LANDMARK HEALTHCARE FACILITIES, LLC
839 North Jefferson Street
Milwaukee, Wisconsin 53202
Telephone: (414) 277-0500
Facsimile: (414) 277-1055

Francis
Cauffman
Foley
Hoffmann

Francis Cauffman Foley Hoffmann Architects Ltd.
2400 Boston St, Suite 402
Baltimore, MD 21224
410-732-3400

M/E/P ENGINEER
AKF ENGINEERS, LLP
1500 WALNUT STREET, SUITE 1400
PHILADELPHIA, PA 19102
P 215-282-2154
F 215-735-6706

Revisions

1 Addendum # 1_092407

Sheet
Partition Types

Project
Landmark Healthcare Facilities LLC

Fore River Medical Pavillon
Portland, Maine

Date
August 23, 2007

Project No.
07-5198

Sheet No.
A10.1