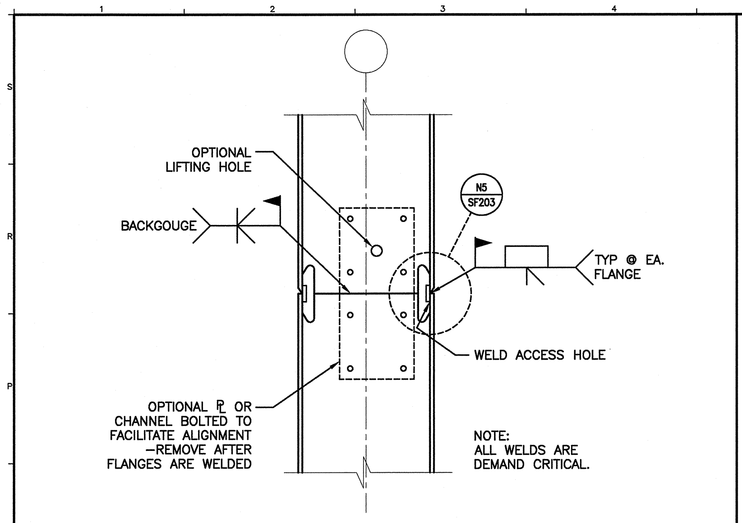

N1	TYPICAL COLUMN SPLICE @ SLRS
1 1/2"=1'-0"	–

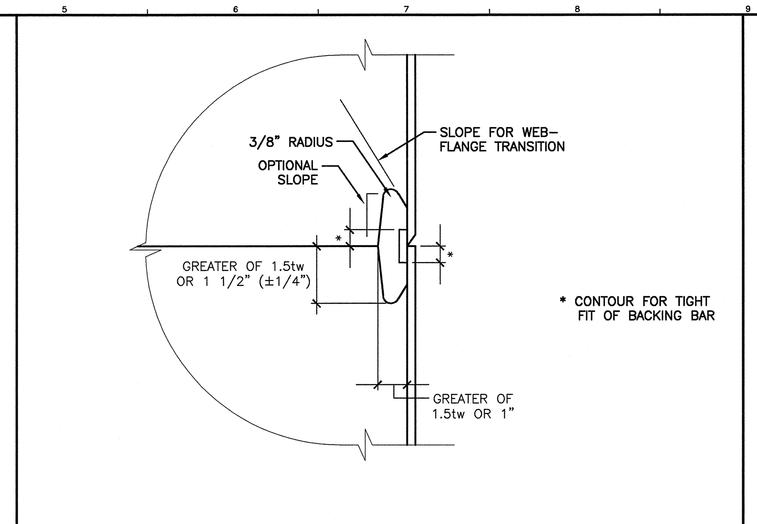

N5	TYPICAL ACCESS HOLE FOR FULL PENETRATION WELDS AT FLANGES
3"=1'-0"	–

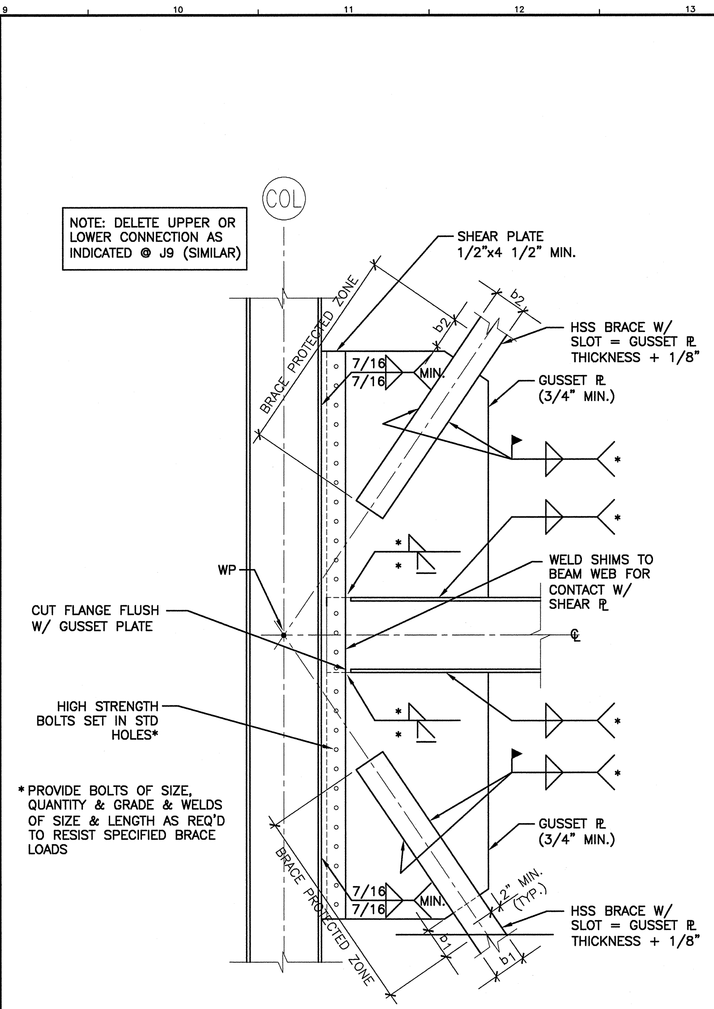

J9	BRACING DETAIL
3/4"=1'-0"	–

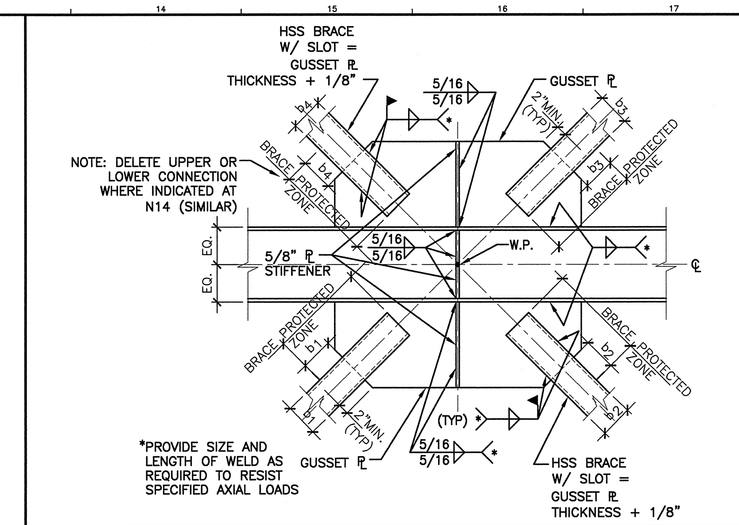

N14	BRACING DETAIL
3/4"=1'-0"	–

NOTE:

1. ALL MEMBERS AND CONNECTIONS SHOWN ON THIS SHEET ARE PART OF THE SEISMIC LOAD RESISTING SYSTEM.
2. THE PROTECTED ZONE FOR EACH BRACE SHALL BE TAKEN AS THE MIDDLE 1/4 OF THE BRACE LENGTH. SEE CONNECTION DETAILS FOR ADDITIONAL PROTECTED ZONES. GUSSET ℞'S & BEAM CONNECTION ℞'S SHALL BE INCLUDED IN THE PROTECTED ZONE.
3. DESIGN BRACING CONNECTIONS FOR AXIAL LOADS INDICATED ON BRACING. LOADS ARE FACTORED FOR LRFD. UNITS ARE kips (INDICATED AS "k"). PLUS SIGN INDICATES A TENSILE FORCE. MINUS SIGN INDICATES COMPRESSION. DESIGN CONNECTIONS UTILIZING THE "UNIFORM FORCE METHOD" AS DESCRIBED IN THE AMERICAN INSTITUTE OF STEEL CONSTRUCTION "MANUAL FOR STEEL CONSTRUCTION LOAD AND RESISTANCE FACTOR DESIGN, THIRD EDITION."
4. SEE CONNECTION NOTES ON SG001 FOR OTHER REQUIREMENTS.

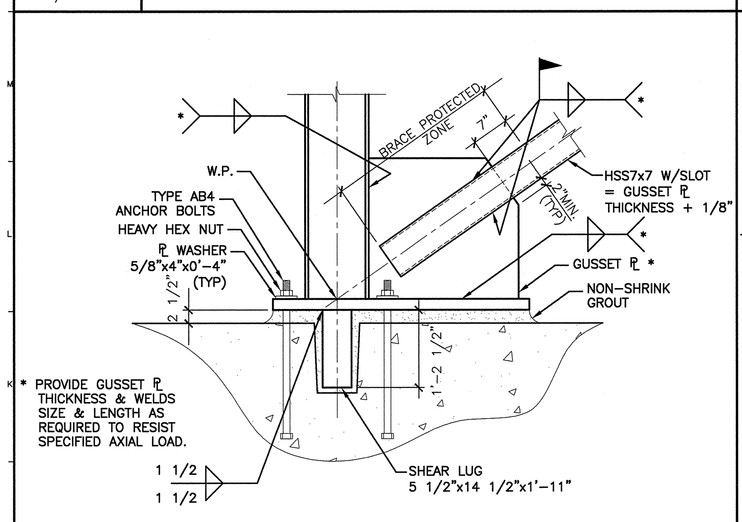

J1	DETAIL
3/4"=1'-0"	–

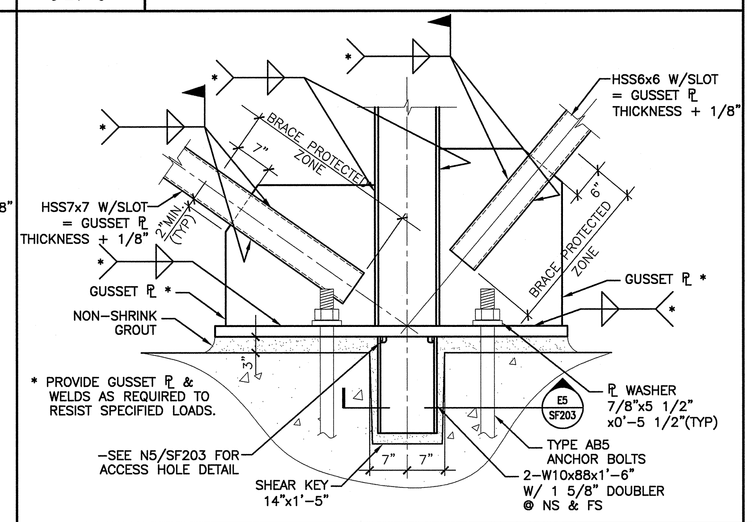

J5	DETAIL
3/4"=1'-0"	–

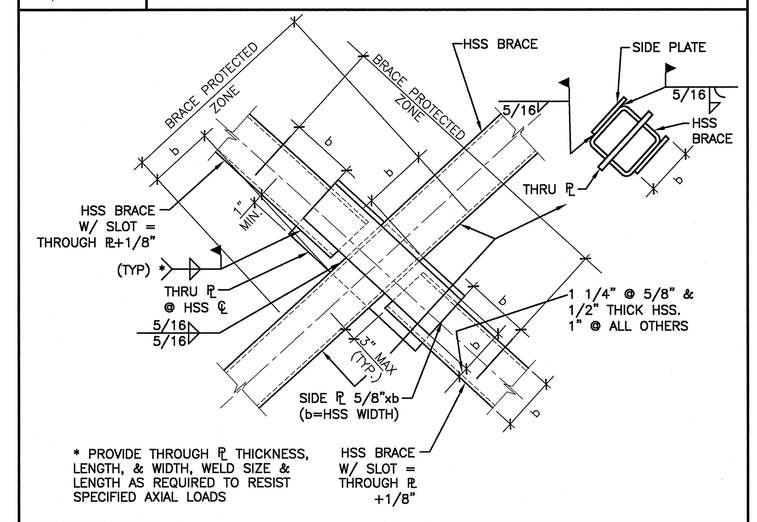

J14	BRACING DETAIL
1 1/2"=1'-0"	–

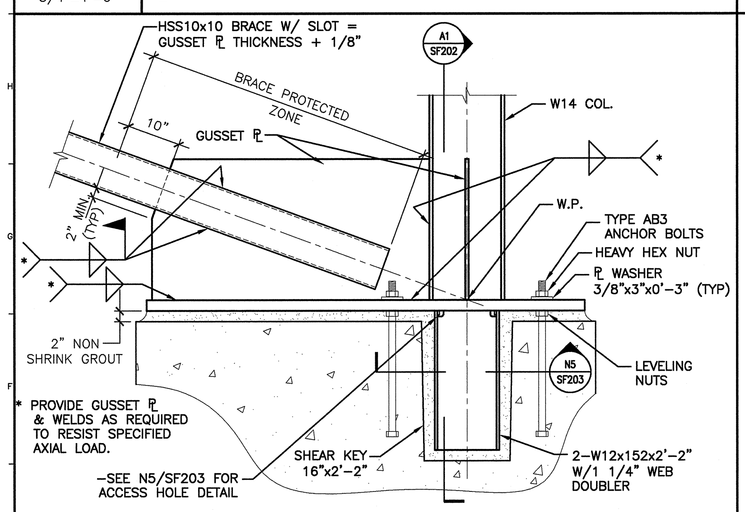

E1	DETAIL
3/4"=1'-0"	–

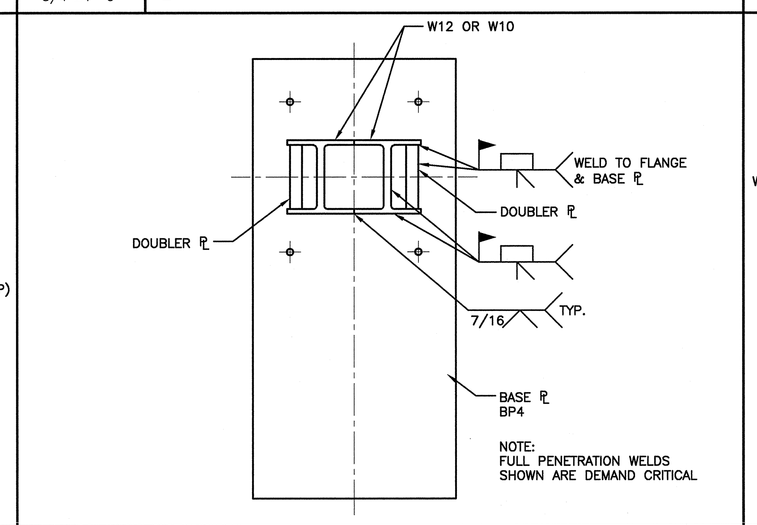

E5	DETAIL
3/4"=1'-0"	–

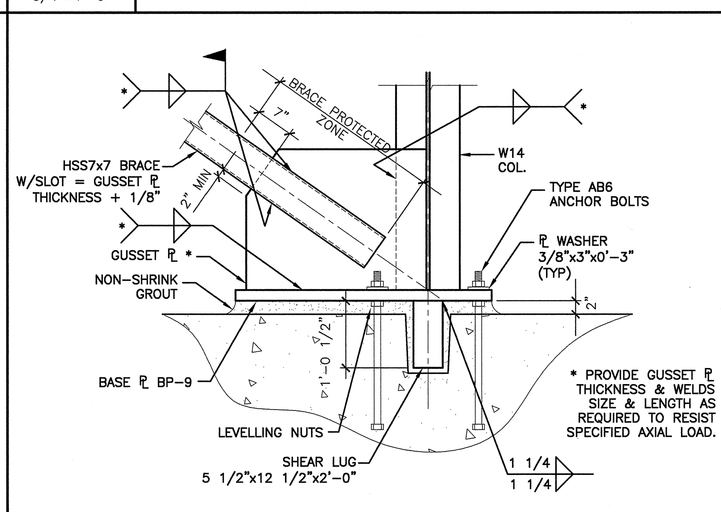

E9	DETAIL
3/4"=1'-0"	SF602

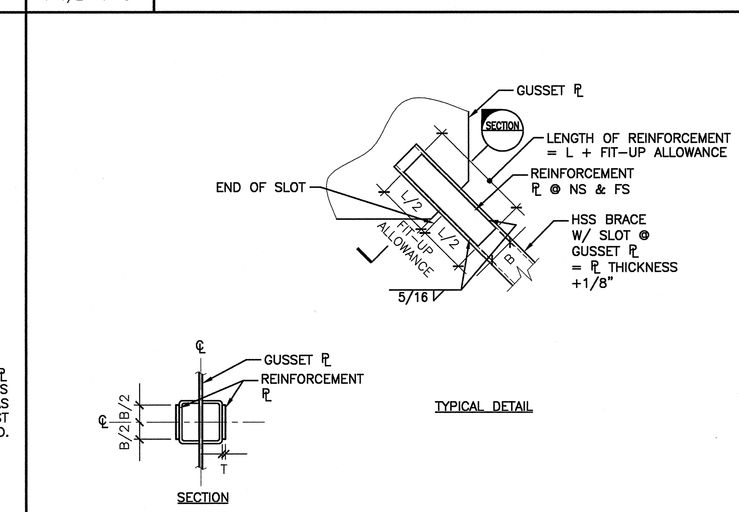

WHERE INDICATED ON ELEVATIONS, REINFORCE SLOTTED HSS SECTIONS AT THE CONNECTION AS SHOWN ON THE TYPICAL DETAIL ABOVE IN ACCORDANCE W/ THE FOLLOWING SCHEDULE:

HSS SECTION	B	T	L
HSS 10x10x5/8	7"	5/8"	3'-0"
HSS 8x8x1/2	5 1/2"	1/2"	2'-0"
HSS 7x7x1/2	4 1/2"	1/2"	1'-8"
HSS 6x6x1/2	3 1/2"	5/8"	1'-6"
HSS 6x6x3/8	4"	1/2"	1'-6"
HSS 5x5x3/8	3"	1/2"	1'-2"
HSS 5x5x5/16	3"	1/2"	1'-2"
HSS 4x4x1/4	2 1/2"	3/8"	8"

A14	TYPICAL SLOTTED HSS REINF. DETAIL
3/4"=1'-0"	–

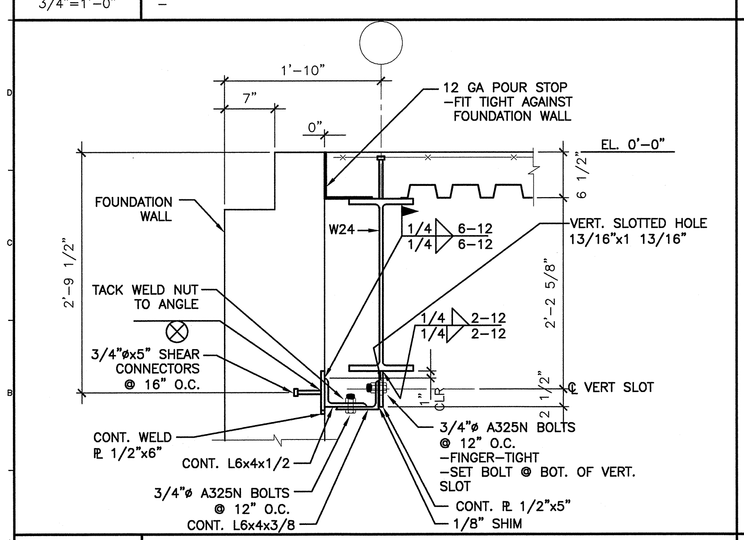

A1	SECTION
1"=1'-0"	–

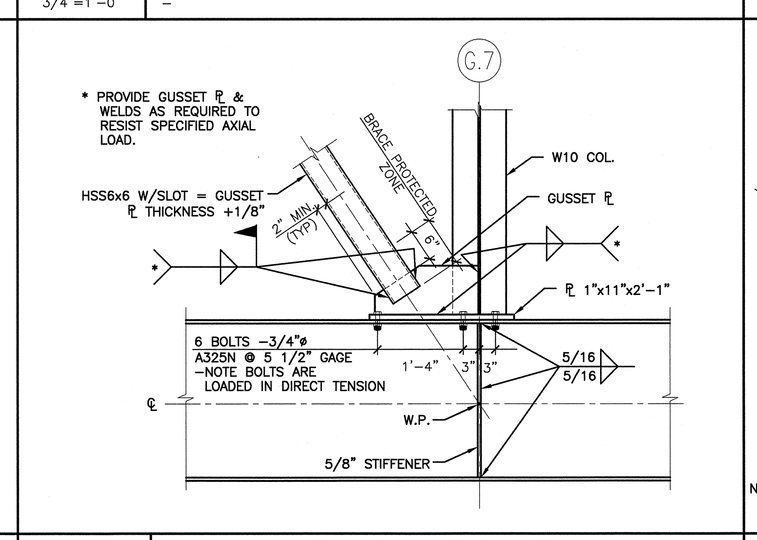

A5	DETAIL
3/4"=1'-0"	–

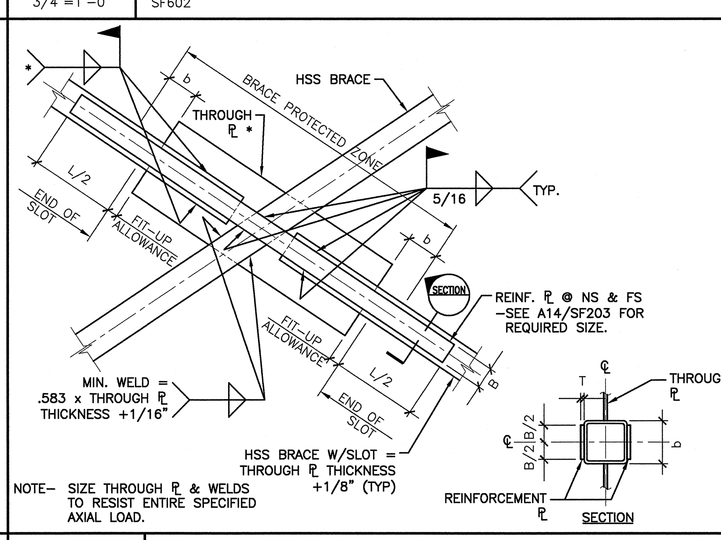

A9	DETAIL
3/4"=1'-0"	–

REV.	DESCRIPTION	DATE
0	ISSUED FOR CONSTRUCTION	9-19-06

ISSUED FOR CONSTRUCTION 9-19-06

CURRENT ISSUE STATUS:

STATE OF MAINE Janusz S. Wiezoka No. 5894 PROFESSIONAL ENGINEER

SMRT

ARCHITECTURE ENGINEERING PLANNING

SMRT
144 Fore Street/P.O. Box 618
Portland, Maine 04104
tel. (207) 772-3846
fax. (207) 772-1070

PROJECT: MERCY HOSPITAL AT FORE RIVER PROJECT 2

LOCATION

SHEET TITLE: BRACING SECTIONS & DETAILS

SCALE:	AS NOTED	DATE:	9-19-06
PROJECT MANAGER:	ELB	GRAPHIC SCALE:	0" 1"
JOB CAP/DRAWN:	HCC		
A/E OF RECORD:	JSW	SHEET No.	SF203
SMRT CAD FILE:	SF203-05034		
PROJECT No.	05034		

© COPYRIGHT 2006 SMRT INC.