DRAWN BY: JP / AN / SB / RV / MS

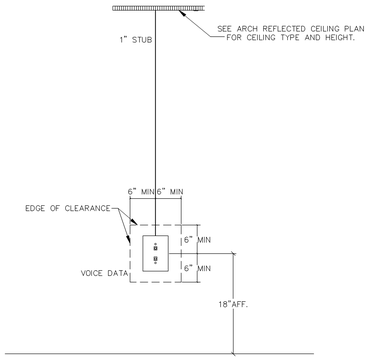

NOTE: THE * INDICATES THE NUMBER OF VOICE DATA/CABLES IN THE CONDUIT/BACKBOX AND THE NUMBER OF VOICE/DATA JACKS ON THE FACE PLATE.

STANDARD CLEARANCES FOR: *

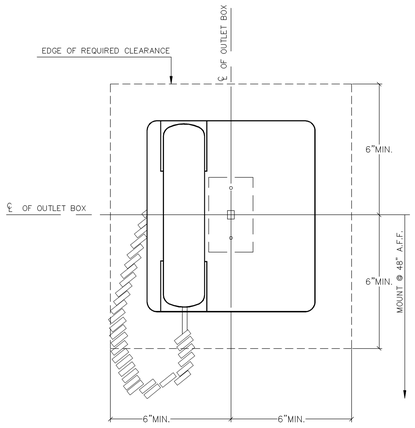

STANDARD CLEARANCES FOR: IW & 1/W

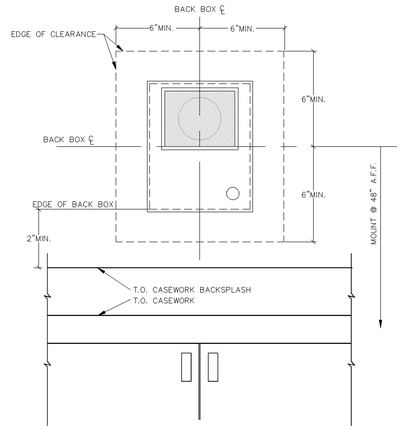

STANDARD CLEARANCES FOR: IF

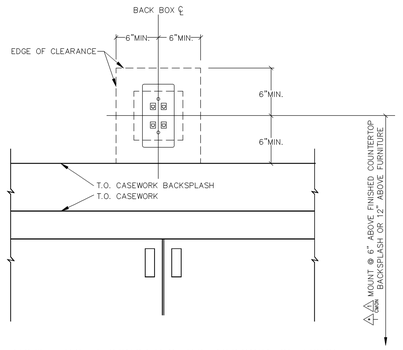

NOTE: THE * INDICATES THE NUMBER OF VOICE DATA/CABLES IN THE CONDUIT/BACKBOX AND THE NUMBER OF VOICE/DATA JACKS ON THE FACE PLATE.

STANDARD CLEARANCES FOR: * W CMON

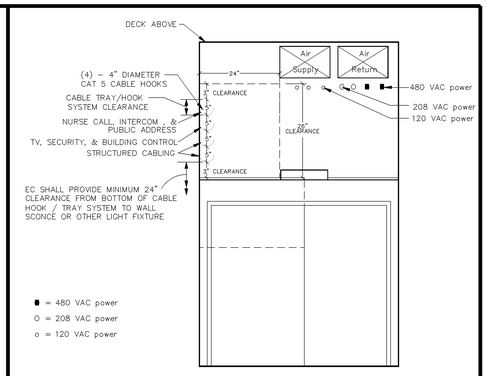

GENERAL NOTES:

Minimum separation between communications cable and 120 VAC electrical power:	8"
Minimum separation between communications cable and 208 VAC electrical power:	12"
Minimum separation between communications cable and 480 VAC electrical power:	24"
Minimum separation between communications cable and flourescent light ballast:	24"
Minimum separation between communications cable and motors and transformers:	48"
Minimum separation between communications cable and relays or controllers:	24"
Minimum separation between communications cable and electrical room:	48"
Minimum separation between communications cable and mri:	96"

TYPICAL CORRIDOR SLEEVE/CABLE CROSS SECTION

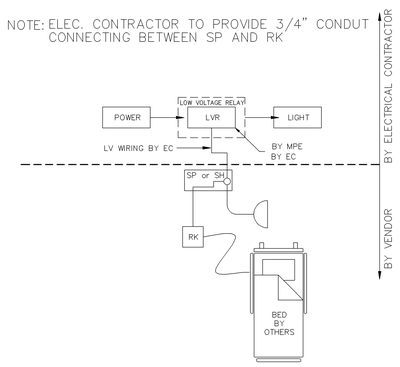

LOW VOLTAGE RELAY DETAIL

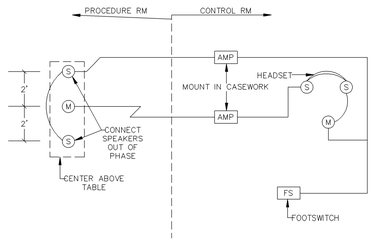

TYPICAL CATH LAB INTERCOM DETAIL

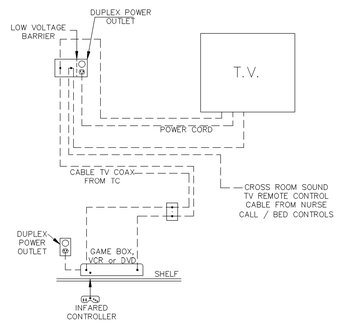

GAMEBOX DETAIL

VOICE/DATA OUTLET; CABLE TO LOCAL COMMUNICATIONS ROOM; REFER TO COMMUNICATIONS DRAWINGS FOR DETAILS ("W" INDICATES WALL TELEPHONE)

EMPTY BOX AND CONDUIT SYSTEM FOR SURGICAL VIDEO SYSTEM; ALL CONDUIT SHALL BE MINIMUM 2" OR AS SHOWN ON VENDOR SHOP DRAWINGS; EC TO PROVIDE PULL STRINGS; GC TO PROVIDE ACCESS PANEL IN CEILING

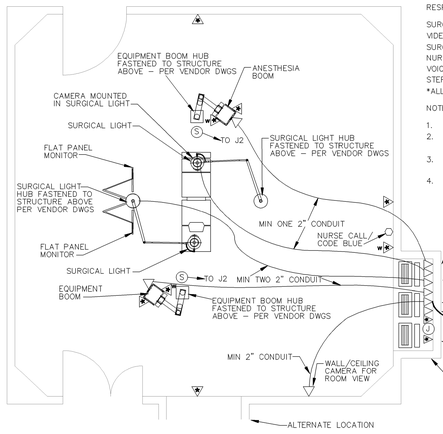

RESPONSIBILITIES:

SURGICAL LIGHTS – OWNER FURNISHED / CONTRACTOR INSTALLED*
VIDEO AND EQUIP BOOMS – OWNER FURNISHED / CONTRACTOR INSTALLED*
SURGICAL VIDEO SYSTEM – OWNER FURNISHED / OWNER (VENDOR) INSTALLED*
NURSE CALL / CODE BLUE – OWNER FURNISHED / OWNER (VENDOR) INSTALLED*
VOICE/DATA OUTLETS & CABLING – OWNER FURNISHED / OWNER (VENDOR) INSTALLED*
STEREO, SPEAKERS AND OUTLETS – OWNER FURNISHED / OWNER (VENDOR) INSTALLED*
*ALL BOXES, CONDUIT, AND ROUGH-IN – CONTRACTOR FURNISHED / CONTRACTOR INSTALLED

NOTES:

1. SEE VENDOR SHOP DRAWINGS FOR ADDITIONAL REQUIREMENTS.
2. DETAIL IS DIAGRAMMATIC ONLY, SEE VENDOR SHOP DRAWINGS FOR SITE SPECIFIC REQUIREMENTS.
3. SEE ARCHITECTURAL AND ENGINEERING DRAWINGS FOR SITE SPECIFIC LAYOUT AND ADDITIONAL REQUIREMENTS.
4. DIAGRAM FOR REFERENCE ONLY.

DIAGRAM OF TYPICAL MINIMALLY INVASIVE SURGERY SUITE VERIFY WITH VENDOR DRAWINGS

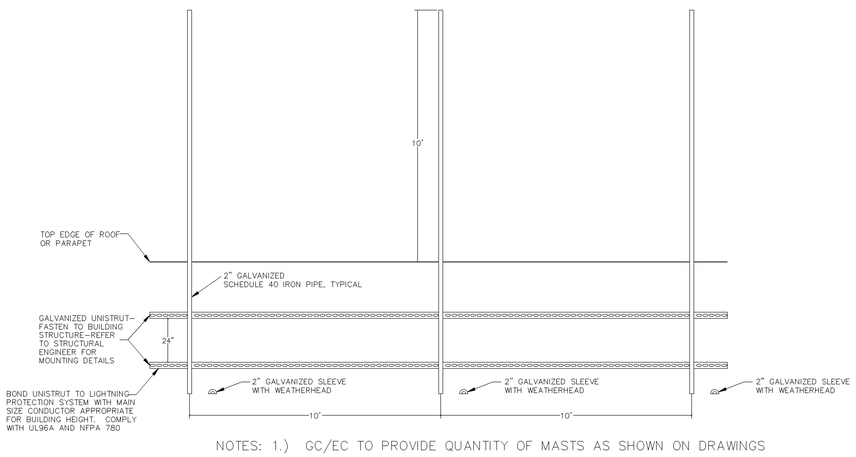

NOTES: 1.) GC/EC TO PROVIDE QUANTITY OF MASTS AS SHOWN ON DRAWINGS
2.) REFER TO STATE AND LOCAL REGULATORY AGENCIES FOR WIND LOADING REQUIREMENTS AND CORRESPONDONG DESIGN.

ANTENNA MAST DETAIL (FOR RADIO OR TV)

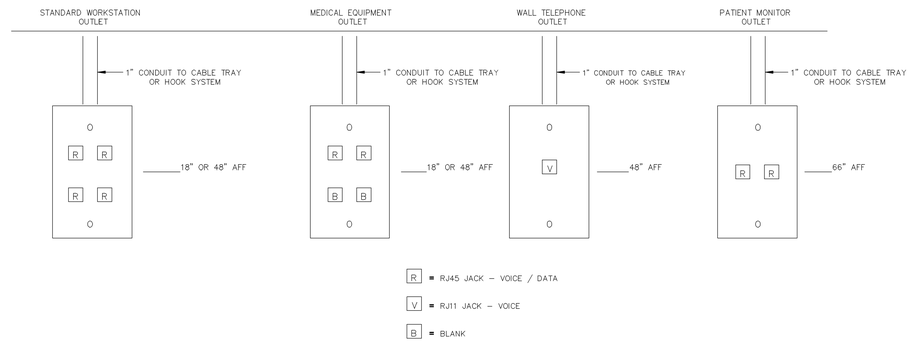

TYPICAL VOICE/DATA OUTLET CONFIGURATIONS

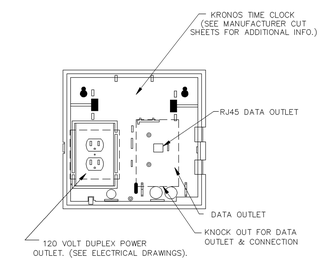

TIME CLOCK DETAIL TC

REFERENCED FLOOR PLAN BACKGROUND FILE DATE: 10/27/06
USERNAME: MARTINSRYAN
FILENAME: M:\PROJECTS\MERCY\RIVERCAMPUS_1515\COMMCM\CM02C-MISC-DETAILS.DWG
XREFS:
TIME: 08 NOV 2006 - 2:00PM

Issued: 11/10/06
Issued For:
100 % CD's
For Construction
Revisions:
GB&A # 1515.1

Mercy Fore River Campus
Portland, Maine
Medical Communications

3281 East Guasti Road Suite 275
Ontario, California 91761
Phone: 909.605.1923
Fax: 909.605.1933
Web: www.gbainc.com

1893 General George Patton Drive
Franklin, Tennessee 37067
Phone: 615.376.3100
Fax: 615.376.3114
Web: www.gbainc.com

GB&A
GENE BURTON & ASSOCIATES

Sheet No.

Medical Communications
Misc Details

CM.02C.1