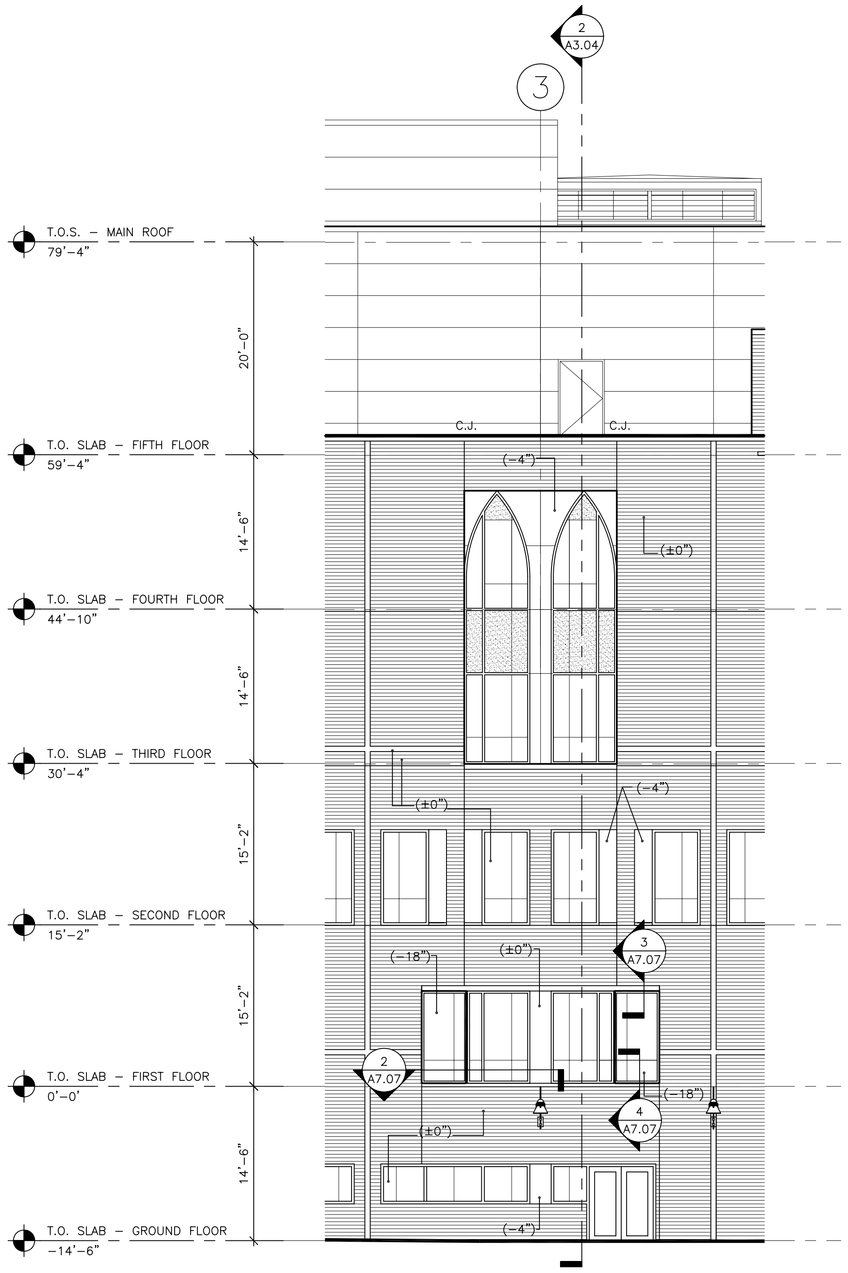

A
A7.07

PARTIAL SOUTH BUILDING ELEVATION

SCALE: 1/8"=1'–0"

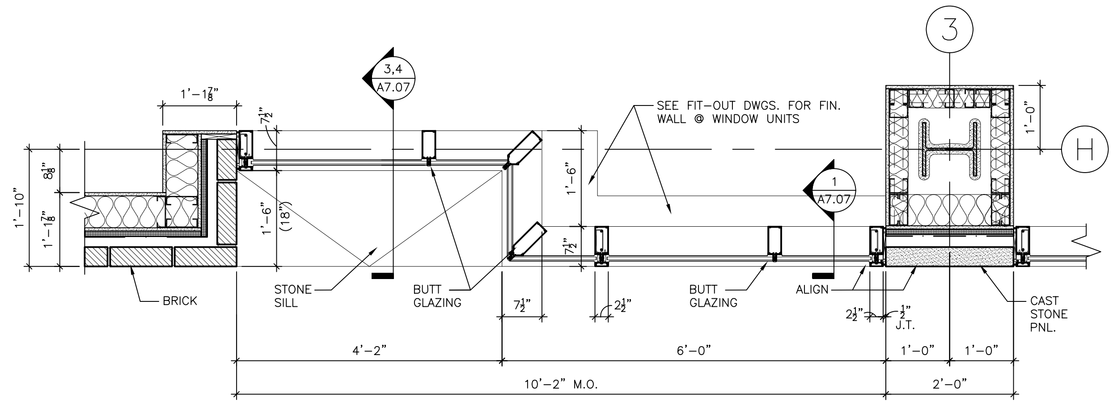

2
A7.07

RECESS WINDOW SILL DETAIL

SCALE: 3/4"=1'–0"

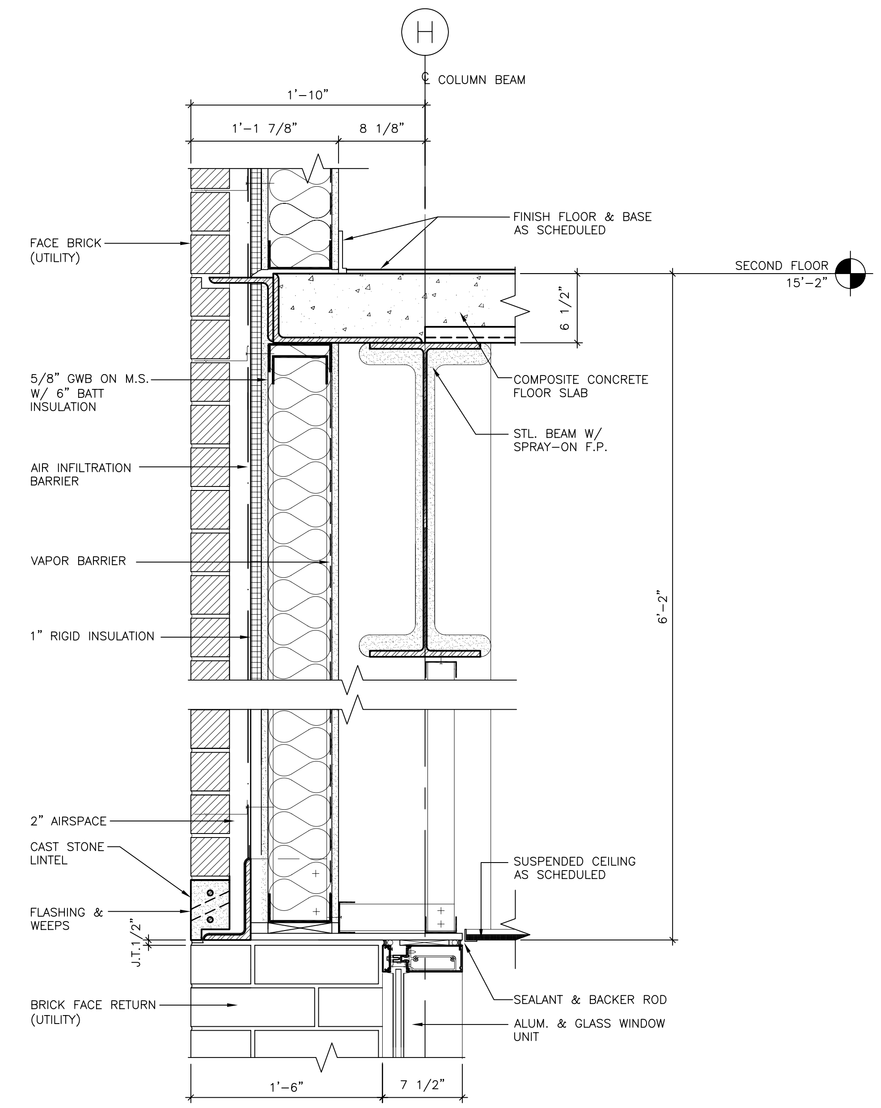

3
A7.07

SOFFIT DET. @ RECESSED WINDOW UNIT

SCALE: 1 1/2"=1'–0"

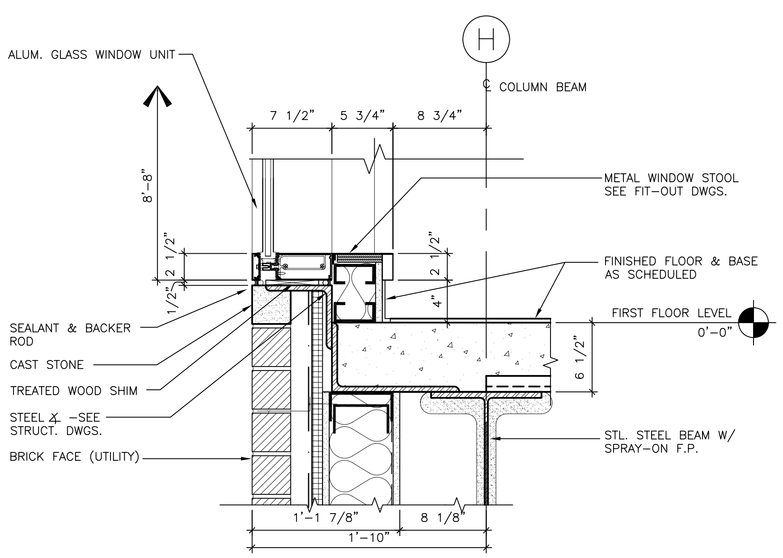

1
A7.07

WINDOW SILL DETAIL @ WINDOW STOOL

SCALE: 1 1/2"=1'–0"

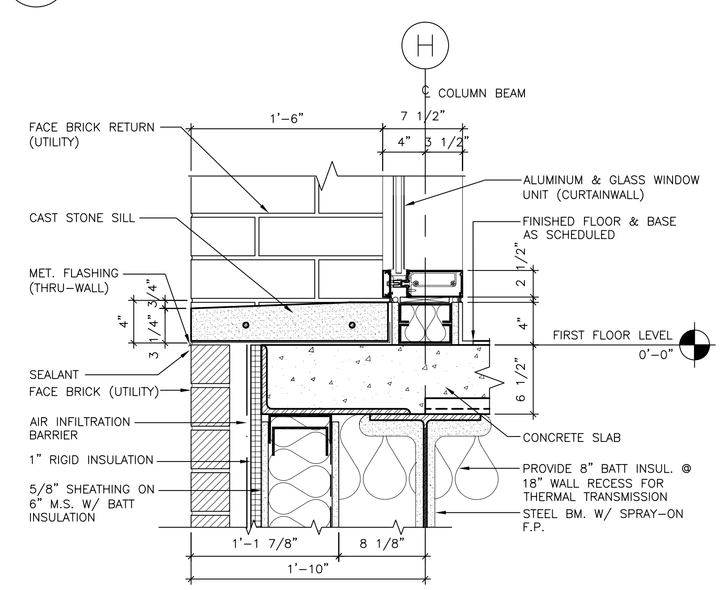

4
A7.07

RECESS WINDOW SILL DETAIL

SCALE: 1 1/2"=1'–0"

Revisions

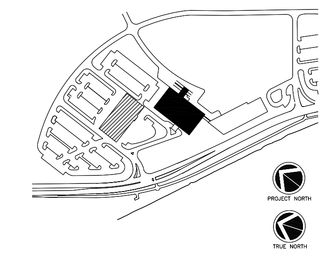

Consultant
CIVIL ENGINEER
DeLuca–Hoffman Associates, Inc.
778 Main Street, Suite 8
South Portland, ME 04106
Phone: (207) 775–1121
Fax:(207) 879–0896

Consultant
ASSOCIATE ARCHITECT/STRUCTURAL ENGINEER
SMRT
144 Fore Street P.O. Box 618
Portland, Maine 04104
Phone: (207) 772–3846
Fax: (207) 772–1070

Consultant
MECHANICAL/ELECTRICAL ENGINEER
Bard, Rao + Athanas Consulting Engineers, LLC
The Arsenal on the Charles
311 Arsenal Street
Watertown, MA 02472–5789
Phone: 617.254.0016
Fax: 617.924.9339

Consultant
EQUIPMENT PLANNING
Gene Burton & Associates
1893 General George Patton Drive
Franklin, Tennessee 37067
Phone: (615) 376–3100
Fax:(615) 376–3114

Consultant
CONSTRUCTION MANAGER
Gilbane Building Company
7 Jackson Walkway
Providence, Rhode Island 02903
Phone: (401) 456–5905
Fax: (401) 456–5516

Consultant
FOOD SERVICE
Inman Foodservice, LLC
1808 West End Ave. Suite 1400
Nashville, TN 37203
Phone: (615) 321–5591
Fax: (615) 321–5689

It is the responsibility of the Construction Manager/General Contractor and all Sub–Contractors to verify all dimensions and accept conditions of prior work by related trades before proceeding with any work.

Date	
10.02.06	CORE & SHELL ISSUED FOR CONSTRUCTION

Drawn By
MAF/JJL/CLB/CLJ/LMS

Scale
AS NOTED

Francis

Cauffman

Foley

Hoffmann

Francis Cauffman Foley Hoffmann Architects Ltd.
2120 Arch Street
Philadelphia, PA 19103
215–568–8250

Project Title

Mercy Health System of Maine

FORE RIVER SHORT STAY HOSPITAL

MERCY

Project Number
F05–4898

Drawing Title and Number
Partial Elevations & Details

A7.07