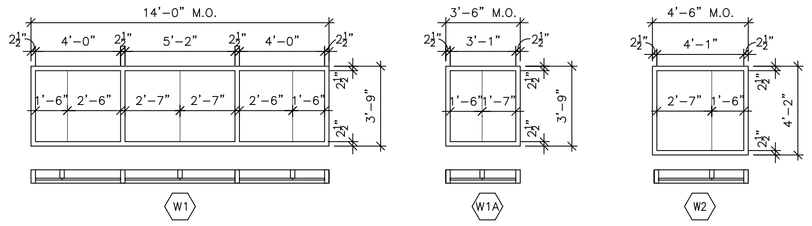

NOTE:
ALL DIMENSIONS TO BE FIELD VERIFIED BEFORE FABRICATION.

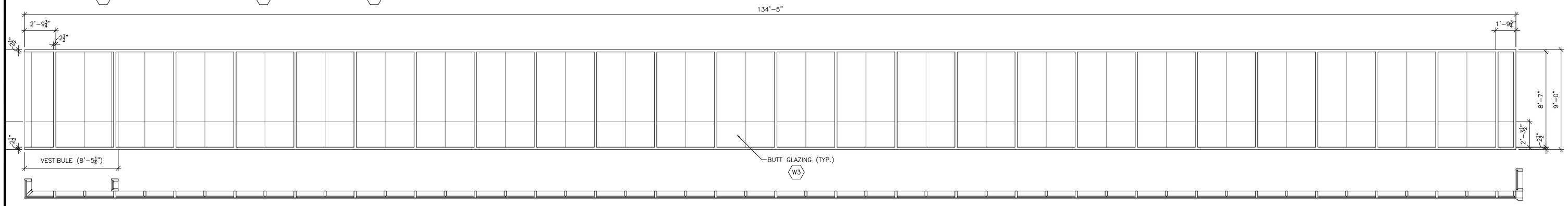

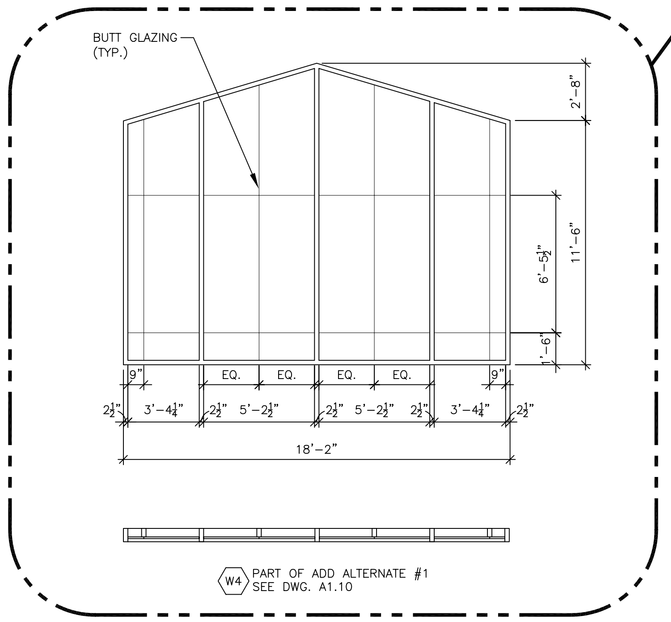

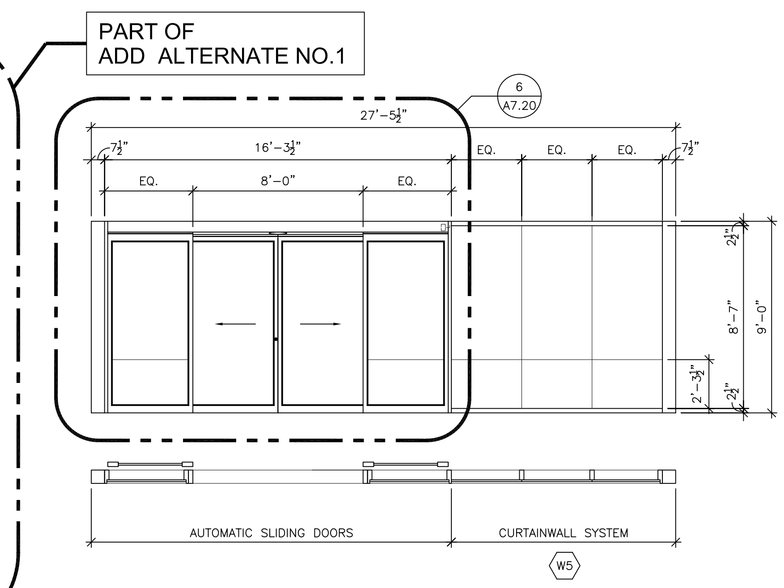

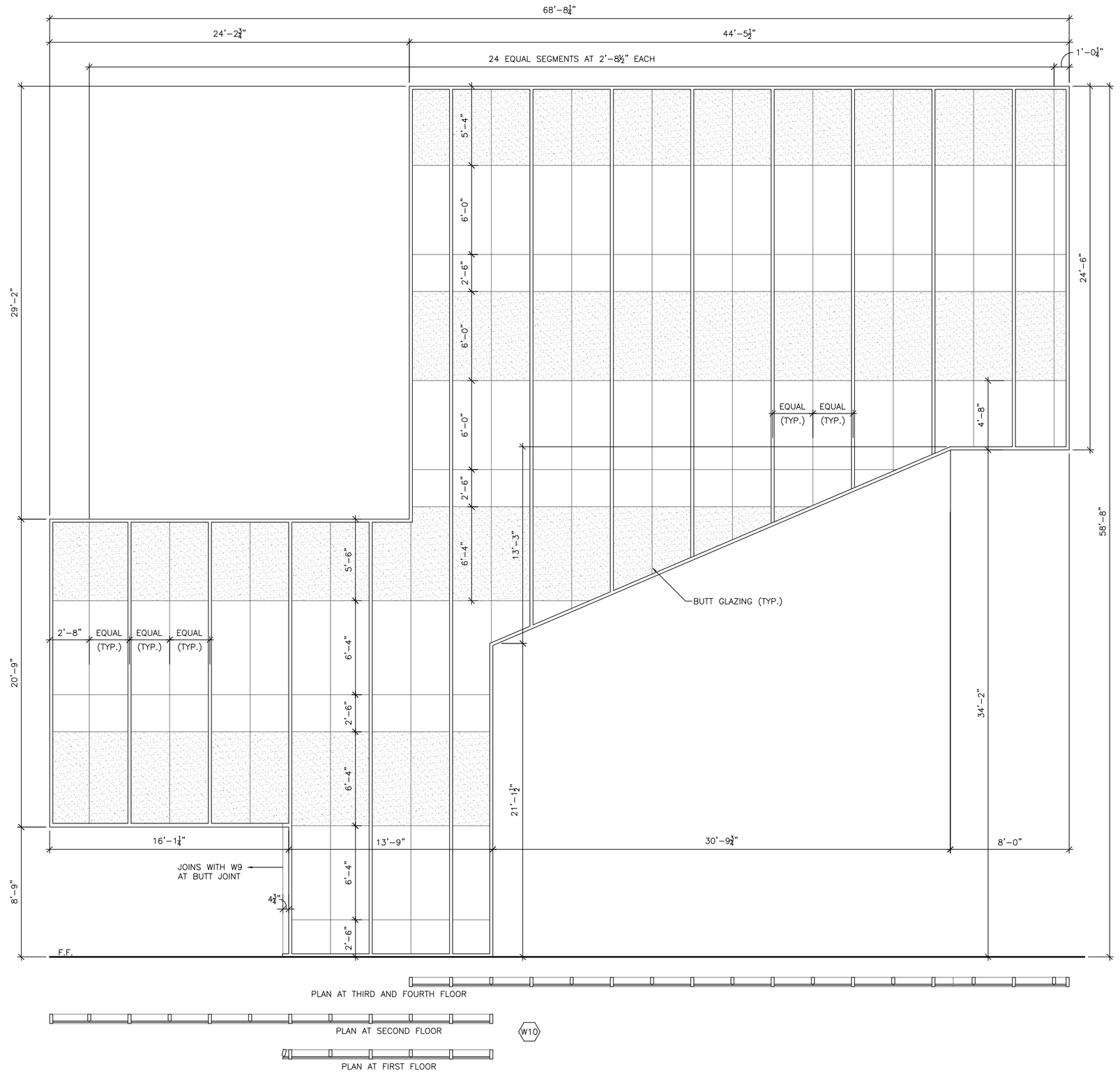

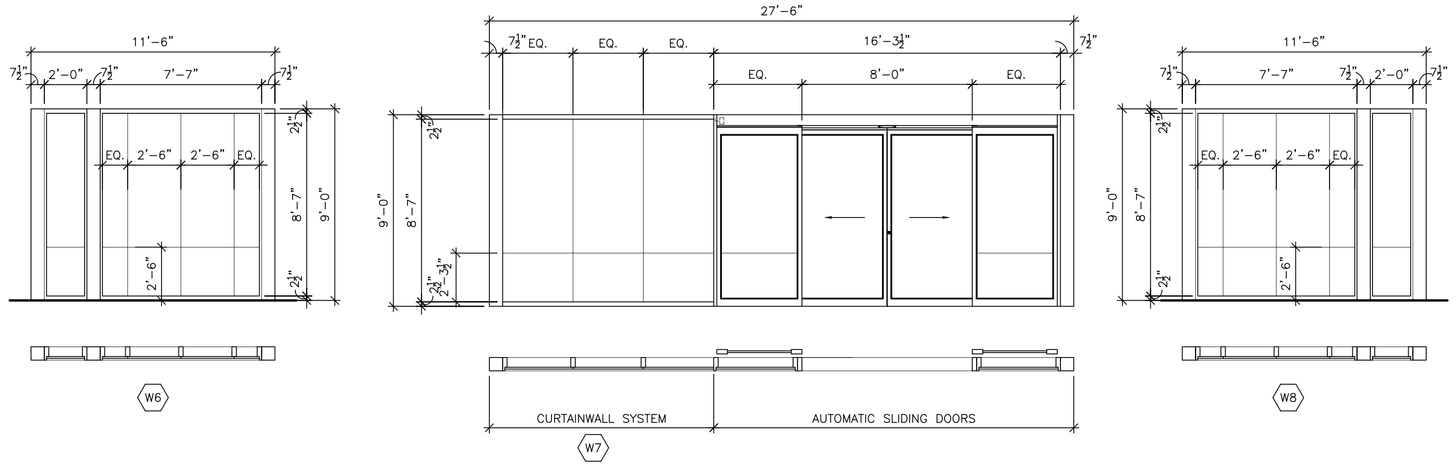

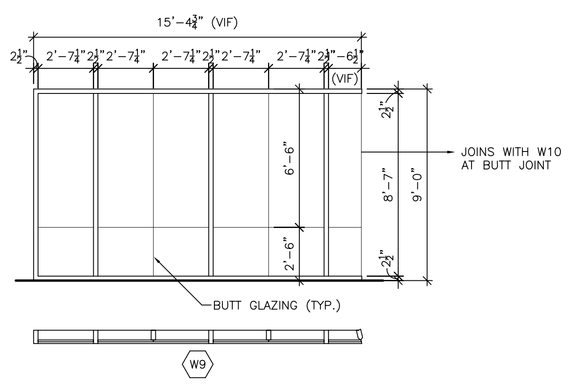

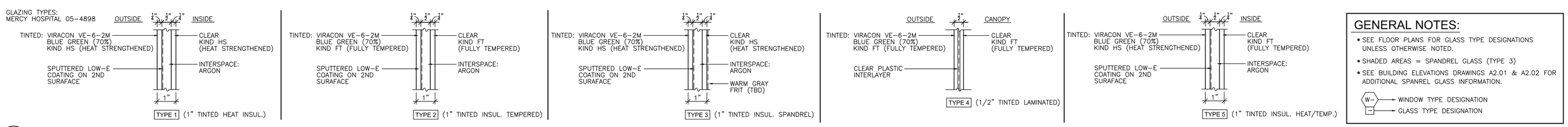

GENERAL NOTES:

- SEE FLOOR PLANS FOR GLASS TYPE DESIGNATIONS UNLESS OTHERWISE NOTED.
- SHADED AREAS = SPANDREL GLASS (TYPE 3)
- SEE BUILDING ELEVATIONS DRAWINGS A2.01 & A2.02 FOR ADDITIONAL SPANREL GLASS INFORMATION.

W– WINDOW TYPE DESIGNATION
– GLASS TYPE DESIGNATION

1 / A6.10 WINDOW ELEVATIONS AND GLASS TYPE DETAILS
1/4" = 1'-0" / NTS

Revisions

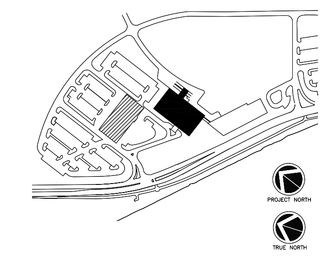

Consultant
CIVIL ENGINEER
DeLuca-Hoffman Associates, Inc.
778 Main Street, Suite 8
South Portland, ME 04106
Phone: (207) 775-1121
Fax:(207) 879-0896

Consultant
ASSOCIATE ARCHITECT/STRUCTURAL ENGINEER
SMRT
144 Fore Street P.O. Box 618
Portland, Maine 04104
Phone: (207) 772-3846
Fax: (207) 772-1070

Consultant
MECHANICAL/ELECTRICAL ENGINEER
Bard, Rao + Athanas Consulting Engineers, LLC
The Arsenal on the Charles
311 Arsenal Street
Watertown, MA 02472-5789
Phone: 617.254.0016
Fax: 617.924.9339

Consultant
EQUIPMENT PLANNING
Gene Burton & Associates
1893 General George Patton Drive
Franklin, Tennessee 37067
Phone: (615) 376-3100
Fax:(615) 376-3114

Consultant
CONSTRUCTION MANAGER
Gilbane Building Company
7 Jackson Walkway
Providence, Rhode Island 02903
Phone: (401) 456-5905
Fax: (401) 456-5516

Consultant
FOOD SERVICE
Inman Foodservice, LLC
1808 West End Ave. Suite 1400
Nashville, TN 37203
Phone: (615) 321-5591
Fax: (615) 321-5689

It is the responsibility of the Construction Manager/General Contractor and all Sub-Contractors to verify all dimensions and accept conditions of prior work by related trades before proceeding with any work.

Date	
10.02.06	CORE & SHELL ISSUED FOR CONSTRUCTION

Drawn By
MAF/JJL/CLB/CLJ/LMS

Scale
AS NOTED

Francis

Cauffman

Foley

Hoffmann

Francis Cauffman Foley Hoffmann Architects Ltd.
2120 Arch Street
Philadelphia, PA 19103
215-568-8250

Project Title

Mercy Health System of Maine

FORE RIVER SHORT STAY HOSPITAL

MERCY

Project Number
F05-4898

Drawing Title and Number
WINDOW SCHEDULE

A6.10