FINISH LEGEND

GENERAL AREA FINISH BOX
CEILING — C
W — WALL
BASE — B | F — FLOOR
FLOOR MATERIAL TRANSITION

FINISH SCHEDULE

FINAL COLORS PENDING OWNER APPROVAL

FLOOR FINISHES

WOODLOOK SHEET VINYL "V"

V-1 MFR: ARMSTRONG
STYLE: TIMBERLINE
COLOR: NATURAL BEECH
NUMBER: 37007
LOCATION: 3RD FLOOR PATIENT ROOMS, RADIOLOGY TREATMENT ROOMS, CAFETERIA

V-2 MFR: ARMSTRONG
STYLE: TIMBERLINE
COLOR: MEDIUM CHERRY
NUMBER: 37009
LOCATION: CAFETERIA ACCENT

V-3 MFR: ARMSTRONG
STYLE: MEDINTECH
COLOR: BRUSHED SAND
NUMBER: 88497
LOCATION: TOILET ROOMS

V-4 MFR: ARMSTRONG
STYLE: TRANSLATIONS
COLOR: MINERAL GREEN
NUMBER: 34852
LOCATION: CAFETERIA ACCENT

CARPET "CPT"

CPT-1 MFR: BLUERIDGE
STYLE: BROOK
COLOR: SANDLOT 2070
SIZE: 6' BROADLOOM
LOCATION: 1ST & SECOND FL. WAITING, PRIVATE DINING

CPT-2 MFR: BLUERIDGE
STYLE: FIELD F210
COLOR: SANDLOT 2070
SIZE: 6' BROADLOOM
LOCATION: 1ST & 2ND FL. GENERAL CPT.

CPT-3 MFR: LEES
STYLE: FIRST STEP
COLOR: 524 STEPPING STONE
SIZE: 18 X 18"
LOCATION: ENTRY VESTIBULES

CPT-4 MFR: SHAW
STYLE: RETREAT
COLOR: TRANQUILITY
SIZE: ECOWORX TILE 18x18"
LOCATION: 3RD FL. GENERAL CPT

CPT-5 MFR: SHAW
STYLE: SYNTHESIS III
COLOR: 50371 MOSS
SIZE: ECOWORX TILE 18 X 18"
LOCATION: 3RD FL. ACCENT

CPT-6 MFR: SHAW
STYLE: MIMIC
COLOR: 24402 AQUATINT
SIZE: 18 X 18"
LOCATION: 4TH FL. GENERAL CPT

RUBBER TILE "R"

R-1 MFR: NORA
STYLE: MEGA
COLOR: TBD
SIZE: 3mm H X 48" W SHEETS W/ HEAT WELDED SEAMS
LOCATION: OR'S

R-2 MFR: NORA
STYLE: MEGA
COLOR: TBD
SIZE: 3mm H X 48" W SHEETS W/ HEAT WELDED SEAMS
LOCATION: OR'S

CERAMIC TILE "CT"

CT-2 MFR: AMERICAN OLEAN
STYLE: CERAMIC MOSAICS
COLOR: 0A20 BEACH TAN
SIZE: 2" X 2" X 3/8"
LOCATION: PATIENT TOILET

CT-3 MFR: MARCA CORONA
STYLE: EKOS STONE
COLOR: GRANATO
NUMBER: MCTGRAN1212
SIZE: 12"x12"x3/8"
LOCATION: MAIN LOBBY

STONE "ST"

ST-1 MFR: MOHAWK TILE & MARBLE
COLOR: KASHMIR GOLD
FINISH: POLISHED
SIZE: 12" X 12" TYP.
LOCATION: MAIN LOBBY

ST-2 MFR: MALINE TILE COMPANY
STYLE: CAPOZZA TILE
GEMSTONE: RIVER ROCKS
SIZE: 6" BORDER STRIP
LOCATION: MAIN LOBBY

VINYL COMPOSITION TILE "VCT"
(ADD ALT. LINOLEUM, MFR: FORBO STYLE: MARMOLEUM)

VCT-1 MFR: ARMSTRONG
STYLE: STANDARD EXCELON
COLOR: 51858 SANDRIFT WHITE
SIZE: 12"x12"
LOCATION: GENERAL VCT

VCT-2 MFR: ARMSTRONG
STYLE: STANDARD EXCELON
COLOR: 51875 MID GRAYED BLUE
SIZE: 12"x12"
LOCATION: 1ST, 2ND & 4TH FL. ACCENTS

VCT-3 MFR: ARMSTRONG
STYLE: STANDARD EXCELON
COLOR: 57507 DUSTY PLUM
SIZE: 12"x12"
LOCATION: 1ST & 2ND FL. ACCENTS

VCT-4 MFR: ARMSTRONG
STYLE: STANDARD EXCELON
COLOR: 51885 GRANNY SMITH
SIZE: 12"x12"
LOCATION: 4TH FL. ACCENTS

RUBBER BASE "RB"

RB-1 MFR: JOHNSONITE
STYLE: COVE
COLOR: 09 CLAY
SIZE: 4" HIGH
LOCATION: GENERAL

INTEGRAL BASE "I"

I-1 MFR: NORA
STYLE: MEGA
SIZE: 6" H INTEGRAL BASE
LOCATION: HEAT WELDED SEAMS, OR'S

CERAMIC BASE "CB"

CB-1 NOT USED
CB-2 NOT USED
CB-3 MFR: MARCA CORONA
STYLE: EKOS STONE
COLOR: GRANATO
NUMBER: MCTGRAN1212
SIZE: 6" H W/COVE
LOCATION: MAIN LOBBY

QUARRY TILE "QT"

QT-1 MFR: DALTILE
COLOR: 0ê60 BEIGE
SIZE: 6" X 6" TYP. W/ COVE BASE TO MATCH, TYPE Q-3565, 5" X 6"

WALL FINISHES

PAINT "P"

PT-1 MFR: ICI
COLOR: WHITE WHISPER
NUMBER: 44YY 84/042
LOCATION: GENERAL PAINT

PT-2 MFR: BENJAMIN MOORE
COLOR: LOUISBURG GREEN
NUMBER: HC-113
LOCATION: 3RD FLOOR ACCENTS, SEE FINISH PLANS FOR EXTENT

PT-3 MFR: BENJAMIN MOORE
COLOR: VAN CORTLAND BLUE
NUMBER: HC-145
LOCATION: 4TH FLOOR ACCENTS, SEE FINISH PLANS FOR EXTENT

PT-4 MFR: SHERWIN WILLIAMS
COLOR: PATCHWORK PLUM
NUMBER: SW6022
LOCATION: 1ST & 2ND FLOOR ACCENTS
SEE FINISH PLANS FOR EXTENT

PT-5 MFR: SHERWIN WILLIAMS
COLOR: SOFTWARE
NUMBER: SW7074
LOCATION: 1ST & 2ND FLOOR ACCENTS, SEE FINISH PLANS FOR EXTENT

PT-6 MFR: SHERWIN WILLIAMS
COLOR: WATERY
NUMBER: SW6478
LOCATION: CAFETERIA ACCENTS
SEE FINISH PLANS FOR EXTENT

PT-7 MFR: BENJAMIN MOORE
COLOR: GEORGIAN GREEN
NUMBER: HC-115
LOCATION: CAFETERIA & 4TH FL. ACCENTS
SEE FINISH PLANS FOR EXTENT

PT-8 MFR: SHERWIN WILLIAMS
COLOR: UNDERSEAS
NUMBER: SW6214
LOCATION: CAFETERIA ACCENTS
SEE FINISH PLANS FOR EXTENT

PT-9 MFR: SHERWIN WILLIAMS
COLOR: EXCLUSIVE PLUM
NUMBER: SW6263
LOCATION: 3RD FLOOR ACCENTS
SEE FINISH PLANS FOR EXTENT

PT-10 MFR: SHERWIN WILLIAMS
COLOR: SPRING VIOLET
NUMBER: 2117-50
LOCATION: 3RD FLOOR ACCENTS
SEE FINISH PLANS FOR EXTENT

EP-1 MFR: ICI
STYLE: EPOXY PAINT
COLOR: WHITE WHISPER
NUMBER: 44YY 84/042
LOCATION: OR'S, SERVERY

CERAMIC TILE "CT"

CT-1 MFR: CROSSVILLE
COLOR: PARISIAN WHITE
NUMBER: VS77
SIZE: 12" X 12"
LOCATION: PATIENT AND PUBLIC BATHROOMS

STONE "ST"

ST-1 MFR: MOHAWK TILE & MARBLE
COLOR: KASHMIR GOLD
FINISH: POLISHED
SIZE: REFER TO ELEVATION
LOCATION: MAIN LOBBY

PANEL SYSTEM "PS"

PS-1 MFR: B&N INDUSTRIES
PATTERN: HELSINKI
COLOR: MAPLE
NUMBER: 430007-908
SIZE: 46" X 96"

PS-2 MFR: MARLITE
STYLE: CLASSIC CURLY MAPLE LAMINATE
NUMBER: WM221
SIZE: SEE ELEVATIONS
LOCATION: ELEVATOR LOBBIES,
SEE PLANS AND ELEVATIONS FOR SCOPE.

CEILING

PAINT "P"

PT-1 MFR: ICI
COLOR: WHITE WHISPER
NUMBER: 44YY 84/042
LOCATION: GENERAL PAINT

EP-1 MFR: ICI
STYLE: EPOXY PAINT
COLOR: WHITE WHISPER
NUMBER: 44YY 84/042
LOCATION: OR'S, SERVERY

ACOUSTICAL CEILING TILE "ACT"

ACT-1 MFR: ARMSTRONG
STYLE: DUNE, TEGULAR
NUMBER: 1772
SIZE: 24" X 24" W/ 15/16" GRID
LOCATION: GENERAL ACT *ADD ALT: VisualTherapy, CeilingMural Transparency IN IMAGING ROOMS

ACT-2 MFR: ARMSTRONG
STYLE: DUNE, SQUARE LAY-IN
NUMBER: 1772
SIZE: 2" X 4" W/ 15/16" GRID
LOCATION: SEE RCP

ACT-3 MFR: ECOPHON
STYLE: FOCUS DG
NUMBER: TBD
SIZE: 48" X 48" W/ 15/16" GRID (5/16" GAP)
LOCATION: LOBBY, DINING ROOMS

WOOD CEILING PANELS "WCP"

WCP-1 MFR: RULON
STYLE: ALURATONE 500 SERIES
FINISH: CLEAR MAPLE
SIZE: 5X5
LOCATION: CAFETERIA, CHAPEL, 2ND, 3RD, AND 4TH FLOOR RECEPTION AREAS

WINDOWS/DRAPERY (N.I.C.)

WINDOW TREATMENT "WT"

WT-1 MFR: LUTRON
STYLE: SHEERSHADE DESIGNER
NAME: POLYESTER JACQUARD
COLOR: BAMBOO WHEAT
NUMBER: SD46-5K-7
LOCATION: ALL PATIENT ROOMS, EXTERIOR WINDOWS

WT-2 MFR: MAHARAM
STYLE: SHEER DRAPERY W/ RIPPLEFOLD HARDWARE
NAME: DIFFUSE
COLOR: 003 VANILLA
LOCATION: ALL PATIENT ROOMS, EXTERIOR WINDOWS

CUBICLE CURTAIN "CC"

CC-1 MFR: TBD
NUMBER:
COLOR:
LOCATION:
WIDTH:

CC-2 MFR: TBD
NUMBER:
COLOR:
LOCATION:
WIDTH:

CC-3 MFR: TBD
NUMBER:
COLOR:
LOCATION:
WIDTH:

CC-4 MFR: TBD
NUMBER:
COLOR:
LOCATION:
WIDTH:

MISCELLANEOUS

WALL PROTECTION "WP"

WP-1 MFR: CS GROUP
NAME: ACROVYN
COLOR: #858 PUMICE
GAUGE: .04 SHEET
LOCATION: GENERAL WALL PROTECTION
SEE FINISH PLANS/ELEVS FOR EXTENT

WP-2 MFR: CS GROUP
NAME: ACROVYN
COLOR: #521 SPANISH MOSS
GAUGE: .04 SHEET
LOCATION: 3RD FLOOR ACCENTS
SEE FINISH PLANS/ELEVS FOR EXTENT

WP-3 MFR: CS GROUP
NAME: ACROVYN
COLOR: #848 ASPEN
GAUGE: .04 SHEET
LOCATION: 4TH FLOOR ACCENTS
SEE FINISH PLANS/ELEVS FOR EXTENT

SOLID SURFACE "SS"

SS-1 MFR: MEGANITE
COLOR: SAN RAFAEL STONE
NUMBER: 501
LOCATION: GENERAL SOLID SURFACE

SS-2 MFR: MEGANITE
COLOR: SAGE GRANITE
NUMBER: 656
LOCATION: PATIENT TOILET ROOMS

WD-1 SOLID MAPLE WOOD
FINISH: CLEAR
TO MATCH ARCHITECT'S SAMPLE
LOCATION: ALL SOLID WOOD LOCATIONS

PLASTIC LAMINATE "PL"

PL-1 MFR: PIONITE
COLOR: AMBER CURLY MAPLE
NUMBER: WM221
LOCATION: GENERAL VERTICAL LAMINATE

PL-2 MFR: WILSONART
COLOR: DESERT ZEPHYR
NUMBER: 4841-60
LOCATION: GENERAL COUNTERTOP LAMINATE

GENERAL WALL PROTECTION NOTES

(NOTES ARE NOT COORDINATED WITH PLANS)

1. CONTRACTOR IS TO PROVIDE ALL APPROPRIATE TRIM PIECES AND COLOR MATCH CAULK FOR WALL PROTECTION AS RECOMMENDED BY THE MANUFACTURER. THIS INCLUDES TOP CAP, INSIDE AND OUTSIDE CORNER TRIM, 90 DEGREE CORNER TIM AT SOFFITS, ETC.
2. IMPACT-RESISTANT WALL PROTECTION SHEET GOODS TO TERMINATE ON AN INSIDE CORNER OR AT A CORNER GUARD U.O.N..
3. IF PORTION OF THE WALL IS LESS THAN 12", OMIT WALL BUMPERS AND HAND RAILS AND CONTINUE SHEET GOODS WITH TRIM CAP. STOP WALL BUMPERS AND HAND RAILS FROM CONTINUING BEHIND DOORS, U.O.N.
4. SHEET GOOD WAINSCOT TO RUN FROM FLOOR TO CENTER OF HAND RAIL, BUMPER OR CRASH RAIL WHERE RAIL OCCURS.
5. BUMPERS AND HAND RAILS TO STOP SHORT OF CASEWORK DRAWERS AS TO NOT INTERFERE WITH THE OPENING OF THE DRAWER.
6. AT STERILE CORRIDORS AND OPERATING ROOMS ALL WALL PROTECTION SEAMS, JOINTS AND TRANSITIONS TO BE COLOR MATCH CAULKED IN LIEU OF TOP CAPS, "T" AND CORNER TRIMS TO MEET STERILE INTENT. CAULK TO BE FLUSH, SMOOTH AND FREE OF CREVICES.
7. WALL PROTECTION SHEET GOODS TO BE CONTINUOUS AROUND THE PERIMETER OF THE ROOM INCLUDING WHERE CASEWORK OCCURS. SHEET GOODS ALWAYS TO END AT INSIDE CORNERS OR FULL HEIGHT CORNER GUARDS.
8. ALL SHEET GOODS TO HAVE "PEBBLETTE TEXTURE."
9. WALL HANDRAILS, BUMPERS AND CRASH RAILS ARE TO BE COORDINATED WITH CASEWORK, FIRE EXTINGUISHERS, AND ACCESS DOORS.
10. WALL PROTECTION AND HANDRAIL HEIGHTS VARY. SEE ELEVATIONS ON A1.25 FOR MORE INFORMATION.
11. PROVIDE FULL HEIGHT CORNER GUARDS ON ALL OUTSIDE CORNERS UNLESS OTHERWISE NOTED.
12. OR'S TO HAVE FULL HEIGHT SHEET GOOD. ALL SEAMS TO BE CAULKED.

FINISH PLAN AND WALL PROTECTION LEGEND

(NOTES ARE NOT COORDINATED WITH PLANS)
NOTE: SEE SHEET A1.25 FOR WALL PROTECTION DETAILS

CG / CG — TYP. FULL HEIGHT CORNER GUARDS

TYPE 1 — HANDRAIL TO 36"H W/ WP SHEET WAINSCOT BELOW
TYPE 2 — 5"H BUMPER GUARD @36"H W/ 8"H CRASH RAIL BELOW FULL HEIGHT WP SHEET
TYPE 3 — 5"H BUMPER GUARD @36"H W/ 8"H CRASH RAIL BELOW
TYPE 4 — 6"H MAPLE WOOD CHAIR RAIL TO 36"H W/ WP-1 BELOW, UNLESS OTHERWISE NOTED ON ELEVATIONS.
TYPE 5 — WP SHEET WAINSCOT TO 36"
TYPE 6 — WP SHEET WAINSCOT TO UNDERSIDE OF OPENING
TYPE 7 — CRASH RAIL @15"H
TYPE 8 — 5"H BUMPER GUARD @36"H W/ 8"H CRASH RAIL BELOW WP SHEET WAINSCOT TO 36"

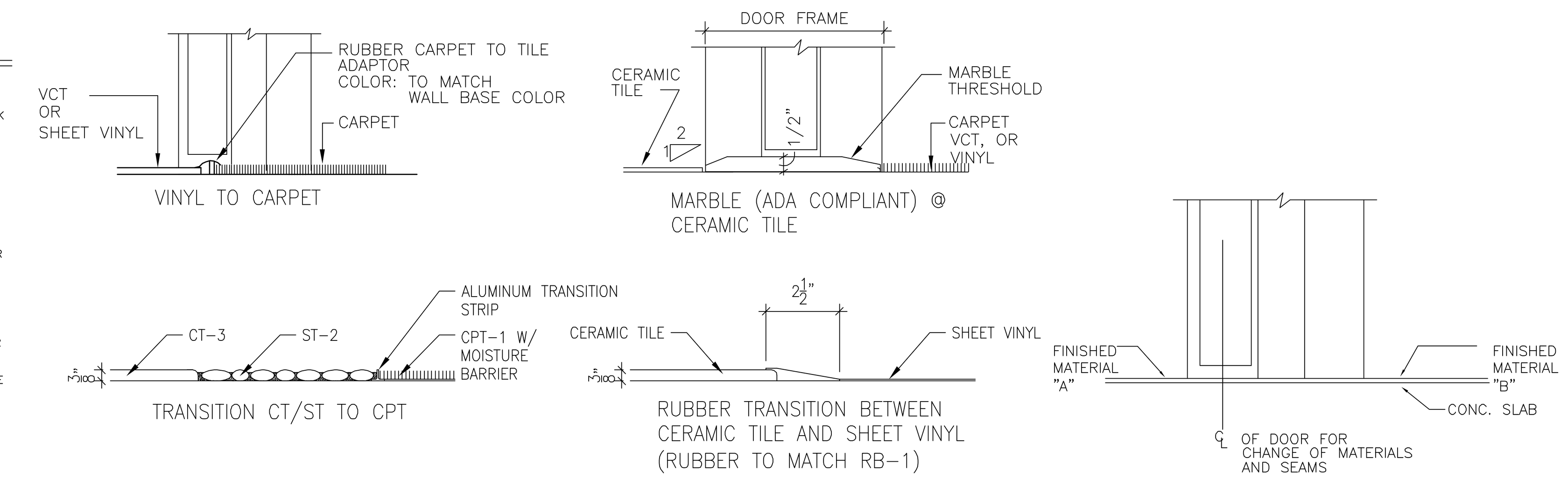

GENERAL INTERIOR NOTES

1. IF ANY DISCREPANCIES OCCUR BETWEEN COLOR, STYLE NAMES OR NUMBERS NOTIFY ARCHITECT IMMEDIATELY.
2. CONTRACTOR SHALL, UPON COMPLETION, REMOVE ALL PAINT FROM WHERE IT SPILLED, SPLASHED, OR SPATTERED ON ALL SURFACES.
3. ALL WALLS TO BE PAINTED SATIN LATEX FINISH. ALL DRYWALL CEILINGS & UNDERSIDES OF SOFFITS TO BE PAINTED FLAT FINISH.
4. ALL H.M. DOOR FRAMES, HOLLOW METAL DOORS & TRIM TO BE PAINTED SEMI-GLOSS LATEX FINISH, COLOR: PT-11, U.O.N..
5. ALL WALL AND CEILING PAINT IN ROOMS DESIGNATED AS STERILE, ISOLATION, ANTE, TOILET OR SOILED UTILITY TO BE EPOXY FINISH.
6. PAINT ALL DIFFUSERS, GRILLES, ELECTRICAL PANELS, ACCESS PANELS, ETC. TO MATCH ADJACENT SURFACES, U.O.N..
7. FLOOR MATERIAL CHANGES SHALL OCCUR AT THE CENTER LINE OF THE DOORS EXCEPT WHERE NOTED OTHERWISE. COORDINATE FLOORING SEAM LOCATIONS WITH SWING AND LOCATION OF DOORS.
8. WHERE VINYL OR RUBBER TRANSITIONS TO CARPET USE REDUCER STRIPS TO MATCH WALL BASE, U.O.N..
9. VINYL COMPOSITION TILE FLOORING SHALL BE INSTALLED IN A MONOLITHIC PATTERNED. TILES SHALL NOT BE QUARTERTURNED.
10. ALL RUBBER BASE AT HARDSURFACE FLOORING TO BE COVE. BASE AT CARPET TO BE STRAIGHT.

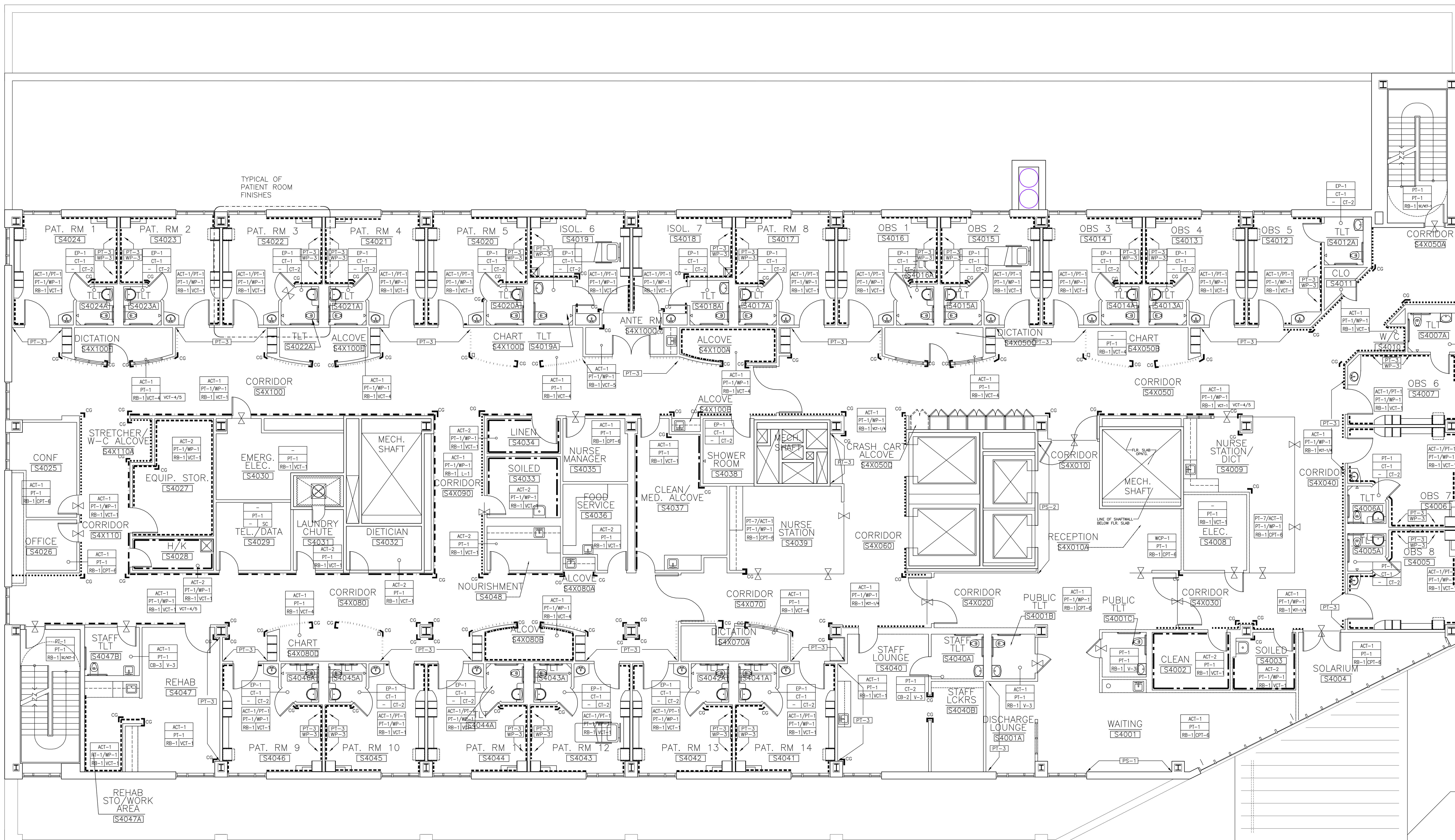

1 FOURTH FLOOR FINISH PLAN
A1.24 SCALE : 1/8"=1'-0"

Revisions

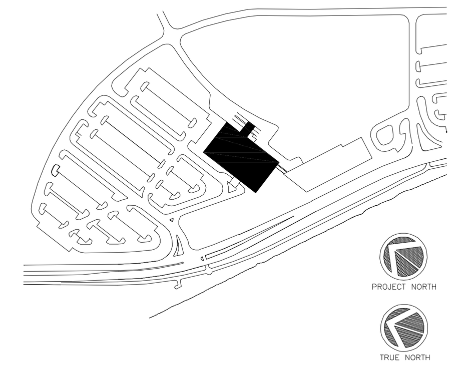

Consultant
CIVIL ENGINEER
DeLuca-Hoffman Associates, Inc.
778 Main Street, Suite 8
South Portland, ME 04106
Phone: (207) 775-1121
Fax:(207) 879-0896

Consultant
ASSOCIATE ARCHITECT/STRUCTURAL ENGINEER
SMRT
144 Fore Street P.O. Box 618
Portland, Maine 04104
Phone: (207) 772-3846
Fax: (207) 772-1070

Consultant
MECHANICAL/ELECTRICAL ENGINEER
Bard, Rao + Athanas Consulting Engineers, LLC
The Arsenal on the Charles
311 Arsenal Street
Watertown, MA 02472-5789
Phone: 617.254.0016
Fax: 617.924.9339

Consultant
EQUIPMENT PLANNING
Gene Burton & Associates
1893 General George Patton Drive
Franklin, Tennessee 37067
Phone: (615) 376-3100
Fax:(615) 376-3114

Consultant
CONSTRUCTION MANAGER
Gilbane Building Company
7 Jackson Walkway
Providence, Rhode Island 02903
Phone: (401) 456-5905
Fax: (401) 456-5516

Consultant
FOOD SERVICE
Inman Foodservice, LLC
1808 West End Ave. Suite 1400
Nashville, TN 37203
Phone: (615) 321-5591
Fax: (615) 321-5689

It is the responsibility of the Construction Manager/General Contractor and all Sub-Contractors to verify all dimensions and accept conditions of prior work by related trades before proceeding with any work.

Date
11/10/06 Issue for Construction
Drawn By
SKG/MAG
Scale
AS NOTED

Francis
Cauffman
Foley
Hoffmann

Francis Cauffman Foley Hoffmann Architects Ltd.
2120 Arch Street
Philadelphia, PA 19103
215-568-8250

Project Title
Mercy Health Care System of Maine
FORE RIVER SHORT STAY HOSPITAL

MERCY

Project Number
F05-4898

Drawing Title and Number
FOURTH FLOOR FINISH PLAN

A1.24