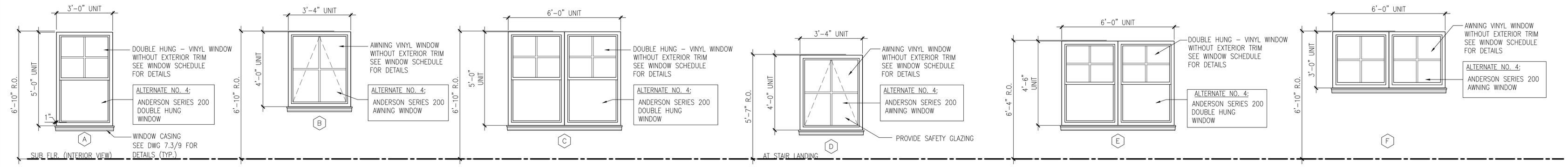

1 WINDOW ELEVATIONS

REFERENCED FROM:

SCALE: 3/8" = 1'-0"

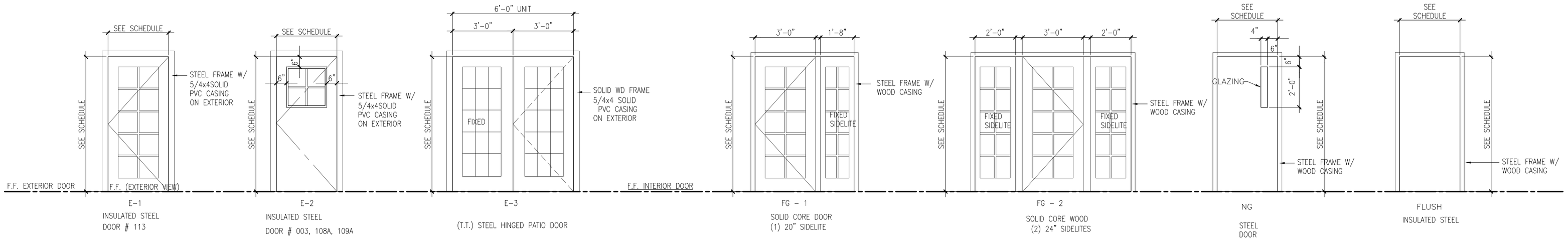

NOTE:

REFER TO DOOR SCHEDULE FOR EXTERIOR AND INTERIOR DOOR DETAILS

2 DOOR ELEVATIONS

REFERENCED FROM:

SCALE: 3/8" = 1'-0"

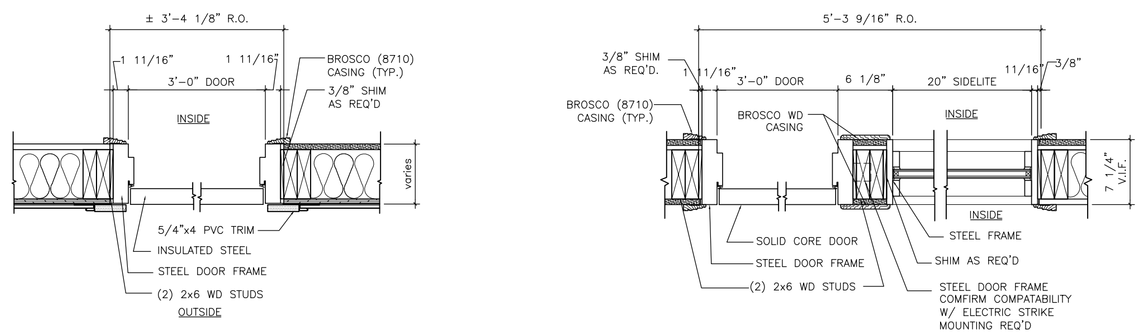

3 DOOR JAMB DETAILS

REFERENCED FROM:

SCALE: 1" = 1'-0"

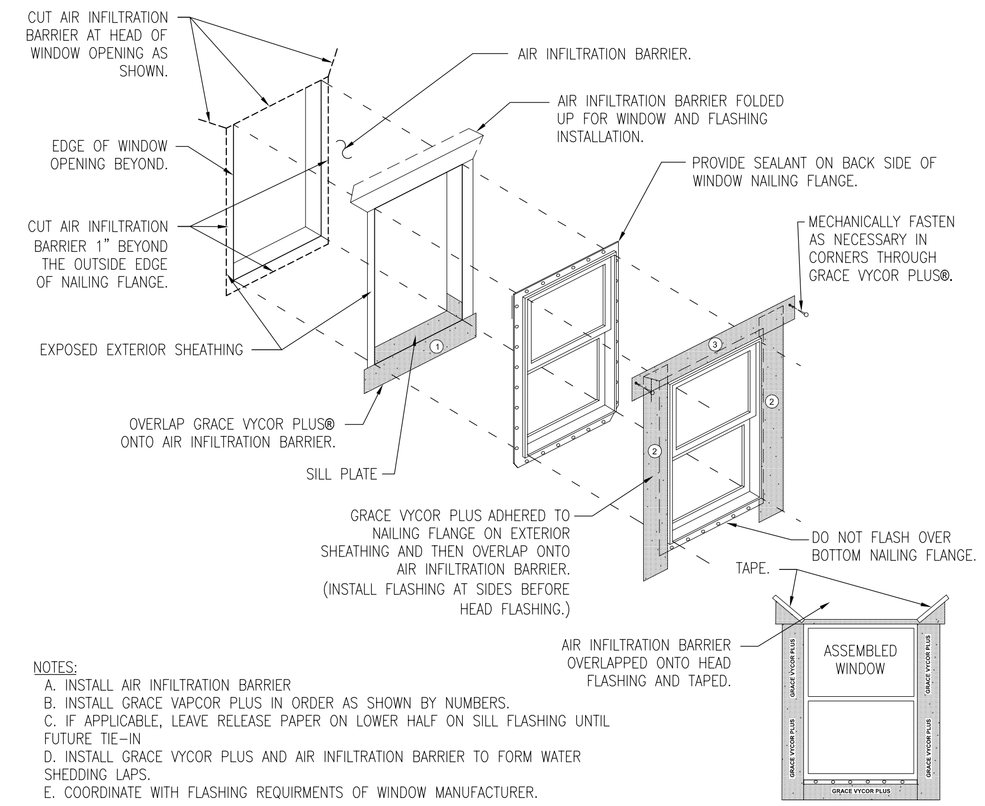

NOTES:

A. INSTALL AIR INFILTRATION BARRIER
B. INSTALL GRACE VAPCOR PLUS IN ORDER AS SHOWN BY NUMBERS.
C. IF APPLICABLE, LEAVE RELEASE PAPER ON LOWER HALF ON SILL FLASHING UNTIL FUTURE TIE-IN
D. INSTALL GRACE VYCOR PLUS AND AIR INFILTRATION BARRIER TO FORM WATER SHEDDING LAPS.
E. COORDINATE WITH FLASHING REQUIRMENTS OF WINDOW MANUFACTURER.

4 WINDOW FLASHING INSTALLATION DIAGRAM

REFERENCED FROM:

SCALE: 3" = 1'-0"

CWS Architects

Architecture
Space Planning
Value Design

434 Cumberland Avenue
Portland, ME 04101
Phone: (207)774-4441
Fax: (207)774-4016

www.CWSarch.com

Owner:

FORE RIVER HOUSING LP

C/O AVESTA

307 CUMBERLAND AVE.

PORTLAND, MAINE 04101

Client:

FORE RIVER APARTMENTS

63 Frederic Street

Portland, Maine

Project No: 04416 FRA

Drawing Title:

WINDOWS AND DOORS ELEVATION AND DETAILS

Scale: AS NOTED

Date: 2/21/2005

Revisions:

Drawing Number:

A4.3