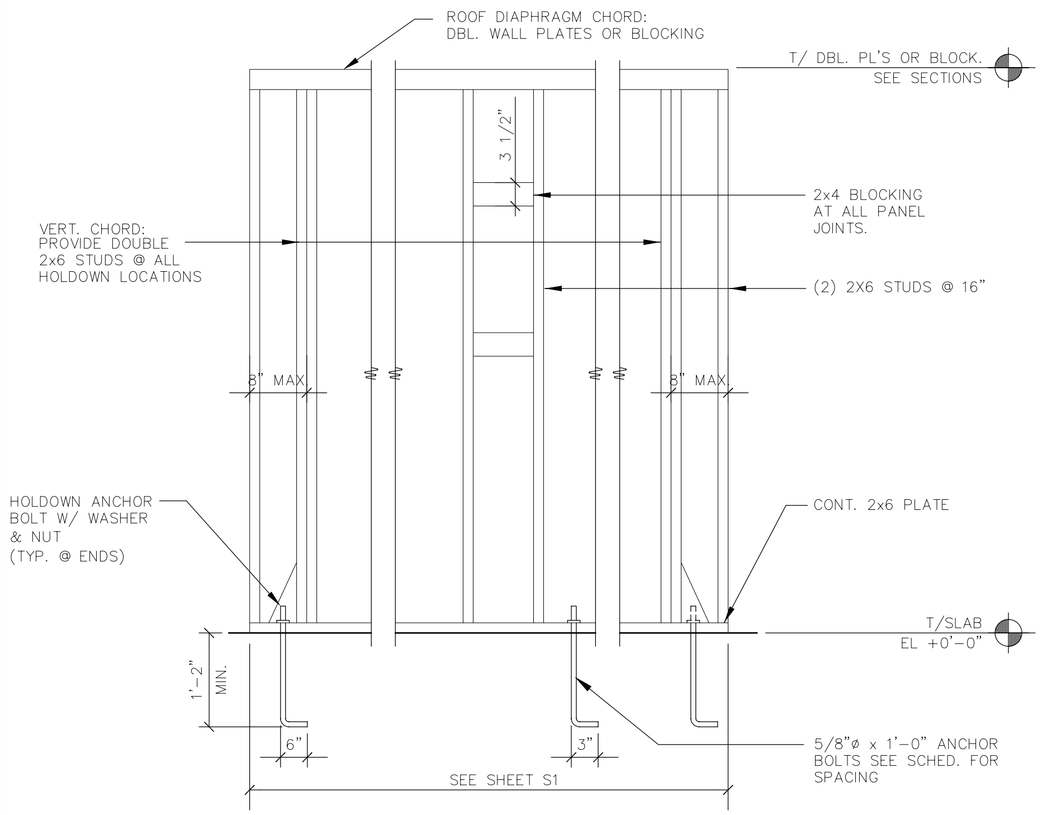

1 S4.0 SHEAR WALL

NTS S-SHEARB

SHEAR WALL SCHEDULE

WIND LOAD = 90 MPH (EXPOSURE B) SEISMIC: Ss=0.40g S1=0.10g

MARK	SHEATHING	SHEATHING NAIL SIZE	SHEATHING NAIL* SPACING @ PANEL EDGES	HOLDOWN** ANCHORS	ANCHOR BOLT SPACING	SHEATHING NAIL SIZE	SHEATHING NAIL* SPACING @ ROOF DIAPHRAGM
A	15/32"	8d	4"	1-HDU8-SDS2.5 7/8"ø A.B.	32"	10d	6"
B	15/32"	8d	4"	1-HDU8-SDS2.5 7/8"ø A.B.	48"	10d	6"
C	15/32"	8d	6"	1-HDU8-SDS2.5 7/8"ø A.B.	48"	10d	6"
D	15/32"	8d	6"	1-HDU8-SDS2.5 7/8"ø A.B.	48"	10d	6"
E	15/32"	8d	6"	1-HDU8-SDS2.5 7/8"ø A.B.	48"	10d	6"
F	15/32"	8d	6"	1-HDU8-SDS2.5 5/8"ø A.B.	48"	10d	6"
G	15/32"	8d	6"	1-HDU8-SDS2.5 7/8"ø A.B.	48"	10d	6"

NOTES:

1. SHEATHING PANELS MAY BE LAID UP HORIZONTALLY OR VERTICALLY. NO VERTICAL PANEL EDGES ON VERT. CHORDS.
2. WIND LOADS GOVERN OVER ALL SEISMIC ZONES UNLESS AS NOTED IN THE REMARKS COLUMN.
3. ALL MEMBERS TO BE DOUGLAS-FIR-LARCH NO. 1 OR BETTER, U.N.O.
4. NAIL ALL SHEATHING TO INTERMEDIATE SUPPORTS @ 12" O.C.
5. ALL NAILS TO BE COMMON NAILS.

* - NAIL SHEATHING TO EA. MEMBER / ROOF DIAPHRAM CHORD & TO EACH MEMBER/WALL VERTICAL CHORD @ THIS SPACING.

** - AS MANUF. BY SIMPSON. SEE MANUF. SPECIFICATIONS FOR SIZE OF HOLDOWN ANCHOR BOLTS REQ'D.

OPEN WEB WOOD JOIST SCHEDULE

LIVE LOAD	DEPTH	MANUFACTURER & SERIES ①
30	28"/36"/28"	TRUS JOIST MACMILLAN "TJS"

1. FOR NATIONAL ACCOUNT PACKAGE & PRICING CONTACT TRUS-JOIST MACMILLAN @ 1-800-558-0044.
2. JOIST MFGR. TO VERIFY SIZE AT HVAC ROOF TOP UNITS.

HEADER	HANGER
2x6	LUS26
2-2x6	LUS26-2
2x8	LUS28
2-2x8	LUS28-2
2x10	LUS210
2-2x10	LUS210-2

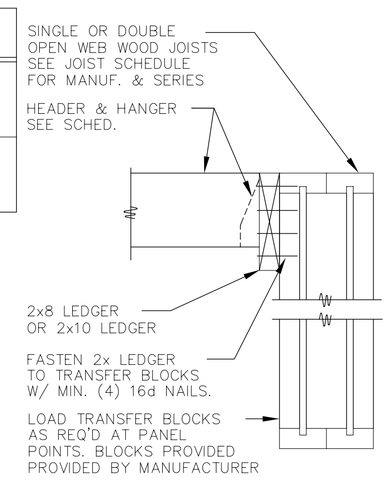

LOAD TRANSFER BLOCKS
CONCENTRATED LOADS

2 S4.0 OPEN WEB JOIST SCHEDULE

6/99 S34-WJSA

HEADER SCHEDULE

S----HSE

MARK	MEMBER	SHAPE	BEARING
H1	5 1/4" x 9 1/4" PSL w/ L5x5x1/2 LLV ATTACHED @12"oc		2 3/4" - PSL 4" - ANGLE EACH SIDE
H2	2-6"X18GA. JSTS.+ 2-6"X18GA. TRACKS.		1 5/8" SEE BELOW
H3	5 1/4" x 11 1/4" PSL		3 1/2" - PSL

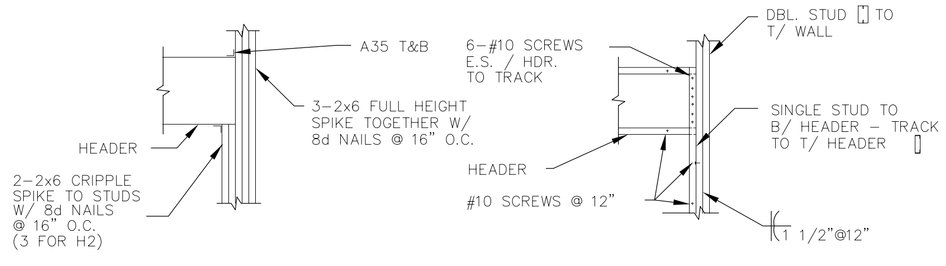

BEAM SCHEDULE

S----BSB

MARK	MEMBER	SHAPE	SUPPORT	REMARKS
B1	W16x26 + 1/4" PLATE		3/8" THRU PLATE	4-3/4"ø A325 BOLTS EA. END
B2	W16x26 + 1/4" PLATE		3/8" THRU PLATE	4-3/4"ø A325 BOLTS EA. END
B3	W10x12		3/8" THRU PLATE	2-3/4"ø A325 BOLTS EA. END
B4	W14x22 + 1/4" PLATE		3/8" THRU PLATE	3-3/4"ø A325 BOLTS EA. END
B5	TS8x6x1/4 + PL.1/4"x9"		1/2" END PLATE	SEE 8-S3.1 FOR DETAILS
B6	W16x31		3/8" THRU PLATE	SEE DETAIL 3C/S3.3
B7	TS8x6x3/8 + PL3/8"X10"		END PLATE	SEE ELEV. 2/S3.3
B8	NOT USED			
B9	W10x26		3/8" THRU PLATE	SEE DETAIL 3C/S3.3
B10	TS6x4x1/4		END PLATE	

COLUMN & BASE PLATE SCHEDULE

MARK	MEMBER		REMARKS
C1	TS 4" x 4" x 1/4"		
C2	TS 4" x 4" x 3/8"		K-BRACE
C3	TS 6" x 6" x 1/2"		MOMENT FRAME
C4	TS 4" x 6" x 3/8"		MOMENT FRAME
C5	TS 5" x 5" x 1/4"		FULL HEIGHT

NOTE:
SEE SHEET S3.0 FOR BASE PLATE DETAILS.

STRUCTURAL GENERAL NOTES:

DESIGN AND LOADING

THE STRUCTURAL DESIGN OF THIS BUILDING WAS BASED ON THE DESIGN CRITERIA:

1. BUILDING CODE: 2003 IBC w/ CITY AMENDMENTS
2. FLOOR LIVE LOAD: 100 PSF
3. ROOF DEAD LOAD: 20 PSF
4. ROOF SNOW FACTORS:
   ROOF SNOW LOAD: 50 PSF
   SNOW EXPOSURE FACTOR, Ce: 1.0
   SNOW LOAD IMPORTANCE FACTOR, I: 1.0
   THERMAL COEFFICIENT, Ct: 1.0
5. BASIC WIND SPEED: 90 MPH (3-SECOND GUST)
   WIND IMPORTANCE FACTOR: 1.00
   BUILDING CATEGORY: I
   WIND EXPOSURE: B
   PRESSURES: 19.2 PSF
6. SEISMIC:
   SEISMIC USE GROUP I
   SEISMIC DESIGN CATEGORY: D
   Ss = 0.40, S1 = 0.10
   WOOD BEARING WALL SYSTEM (R = 6)
   BRACED FRAME (R = 4)
   DESIGN BASE SHEAR = 16.644K (MAX.)
   ANALYSIS PROCEDURE: EQUIVALENT LATERAL FORCE
7. FLOOD LOAD: N/A
8. SPECIAL LOADS: N/A

FOUNDATION NOTES

THE FOUNDATION DESIGN OF THIS BUILDING WAS BASED ON THE FOLLOWING CRITERIA:

1. MAXIMUM ALLOWABLE SOIL BEARING CAPACITY = 3,000 PSF.
2. RECOMMENDED BY DESIGN/BUILD GEOTECHNICAL, LLC IN THEIR REPORT #GNE-00400. AMENDED TO DATE.
3. ANY FILL REQUIRED BELOW SLABS ON GRADE OR FOOTINGS, SHALL BE COMPACTED AS REQUIRED BY THE SOILS REPORT NOTED IN ITEM #2.

ALL EXTERIOR FOOTINGS SHALL EXTEND BELOW THE MAXIMUM ANTICIPATED DEPTH OF FROST.

THE CONTRACTOR SHALL NOTIFY THE ARCHITECT OR ENGINEER OF RECORD IMMEDIATELY IN THE EVENT THAT THE SOILS CONDITIONS ENCOUNTERED VARY FROM THOSE SHOWN ON THE BORING LOGS.

ALL FOUNDATION EXCAVATIONS SHALL BE INSPECTED BY A SOILS TESTING LABORATORY PRIOR TO PLACEMENT OF CONCRETE.

CONCRETE AND REINFORCING

ALL CONCRETE SHALL BE IN ACCORDANCE WITH THE "AMERICAN CONCRETE INSTITUTE BUILDING CODE" (ACI 318) AND WITH "SPECIFICATIONS FOR STRUCTURAL CONCRETE FOR BUILDINGS" (ACI 301) LATEST EDITIONS.

ALL NORMAL WEIGHT CONCRETE (145 PCF) SHALL OBTAIN A MINIMUM 28 DAY COMPRESSIVE STRENGTH OF 3000 PSI.(3500 PSI FOR SLABS).

ALL CONCRETE SUBJECT TO EXTERIOR EXPOSURE SHALL BE AIR ENTRAINED AS RECOMMENDED BY ACI 318.

TEST CYLINDERS SHALL BE MADE AND TESTED AS OUTLINED IN CHAPTER 16 OF ACI-301.

REINFORCING BARS SHALL BE DEFORMED BARS OF NEW BILLET STEEL CONFORMING TO ASTM A-615, GRADE 60. WELDED WIRE FABRIC SHALL CONFORM TO ASTM A-185. ALL REINFORCING AND ACCESSORIES SHALL BE DETAILED AND PLACED IN ACCORDANCE WITH ACI STANDARD 315-02 AND 315R-02.

PROVIDE ALL ACCESSORIES NECESSARY TO SUPPORT REINFORCEMENT AT POSITIONS SHOWN ON THE PLANS AND DETAILS. PLASTIC COATED ACCESSORIES SHALL BE USED IN ALL EXPOSED CONCRETE WORK.

THE GENERAL CONTRACTOR SHALL CHECK WITH ARCHITECTURAL, MECHANICAL AND ELECTRICAL DRAWINGS AND THE SUB-CONTRACTORS FOR OPENINGS, SLEEVES, ANCHORS, HANGERS, INSERTS, SLAB DEPRESSIONS AND OTHER ITEMS RELATED TO THE CONCRETE WORK AND SHALL ASSUME RESPONSIBILITY FOR THEIR PROPER LOCATION.

STRUCTURAL STEEL

STRUCTURAL STEEL SHALL BE DETAILED, FABRICATED AND ERECTED IN ACCORDANCE WITH THE AISC "SPECIFICATION FOR THE DESIGN, FABRICATION AND ERECTION OF STRUCTURAL STEEL FOR BUILDINGS" AND THE AISC "CODE OF STANDARD PRACTICE". STRUCTURAL STEEL SHALL CONFORM TO THE FOLLOWING ASTM SPECIFICATIONS:

ANCHOR BOLTS	A307
HIGH STRENGTH STRUCTURAL BOLTS	A325-N U.N.O.
STRUCTURAL SHAPES AND PLATES	A36 (MIN.)
STRUCTURAL TUBING	A500 GRADE B

FIELD WELDING SHALL BE MADE IN ACCORDANCE WITH A.W.S. D1.1-02
ALL WELDING ELECTRODES SHALL BE E70-XX. ALL SHOP AND "CODE FOR WELDING IN BUILDING CONSTRUCTION" AND SHALL BE MADE BY CERTIFIED WELDERS.

LAMINATED VENEER LUMBER (LVL)

ALL BEAMS SHALL BE MANUFACTURED WITH LAMINATED VENEER LUMBER AND WATERPROOF ADHESIVES.

SIZE, MANUFACTURER & SERIES OF ALL LVL MEMBERS SHALL BE AS SHOWN ON DRAWINGS.

ANY SUBSTITUTIONS MUST BE APPROVED IN WRITING BY ENGINEER OR ARCHITECT OF RECORD.

PROVIDE 3" MINIMUM BEARING OR AS SPECIFIED ON PLANS. REFER TO PLANS FOR FASTENING OF MULTIPLE PIECE BEAMS.

LAMINATED/PARALLEL STRAND LUMBER (LSL/PSL)

ALL BEAMS SHALL BE MANUFACTURED WITH LAMINATED/PARALLEL STRAND LUMBER AND WATERPROOF ADHESIVES.

SIZE, MANUFACTURER & SERIES OF ALL LSL/PSL MEMBERS SHALL BE AS SHOWN ON DRAWINGS.

ANY SUBSTITUTIONS MUST BE APPROVED IN WRITING BY ENGINEER OR ARCHITECT OF RECORD.

PROVIDE 3" MINIMUM BEARING OR AS SPECIFIED ON PLANS. REFER TO PLANS FOR FASTENING OF MULTIPLE PIECE BEAMS.

SAWN LUMBER

ALL GRADES OF LUMBER SHALL BE RATED BY THE SOUTHERN PINE INSPECTION BUREAU (SPIB), OR THE WESTERN WOOD PRODUCTS ASSOCIATION (WWPA). LUMBER GRADES SHALL BE AS FOLLOWS, WITH A MAXIMUM MOISTURE CONTENT OF 19%:

* SOUTHERN PINE NO. 1.
* DOUGLAS FIR-LARCH NO. 1.
* HEM-FIR NO. 1

BOLT HEADS AND NUTS BEARING ON WOOD SHALL BE PROVIDED WITH STANDARD CUT WASHERS. ALL WOOD IN CONTACT WITH CONCRETE OR MASONRY SHALL BE PRESSURE TREATED.

MINIMUM NAILED CONNECTIONS FOR WOOD FRAMING MEMBERS SHALL BE IN ACCORDANCE WITH THE LOCAL BUILDING CODE OR TABLE 2304.9.1 OF THE INTERNATIONAL BUILDING CODE, 2003 EDITION, IF NO OTHER CRITERIA IS GIVEN.

CONNECTORS SHOWN ON THE DETAILS ARE MANUFACTURED BY SIMPSON. WRITTEN APPROVAL BY ENGINEER REQUIRED FOR SUBSTITUTIONS.

OPEN WEB WOOD JOISTS

OPEN WEB WOOD JOISTS SHALL BE MANUFACTURED WITH MACHINE STRESS RATED TOP AND BOTTOM CHORDS. WEBS SHALL BE TUBULAR STEEL MEMBERS PER MANUFACTURERS' SPECIFICATIONS.

SIZE, MANUFACTURER & SERIES OF ALL OPEN WEB JOISTS SHALL BE AS SHOWN ON DRAWINGS.

ANY SUBSTITUTIONS MUST BE APPROVED IN WRITING BY ENGINEER OR ARCHITECT OF RECORD.

PROVIDE 3 1/2" MINIMUM BEARING OR AS SPECIFIED ON PLANS. SHIM AS REQUIRED TO PROVIDE FULL BEARING AND LEVEL SUPPORT.

DO NOT CUT TOP OR BOTTOM CHORDS.

ALL HANGERS AND FRAMING CONNECTORS SHOWN ARE MANUFACTURED BY SIMPSON STRONG TIE. ANY SUBSTITUTIONS MUST BE APPROVED IN WRITING BY ENGINEER OR ARCHITECT OF RECORD.

REFER TO PLANS FOR WEB STIFFENER AND CONCENTRATED LOAD REQUIREMENTS.

REFER TO MANUFACTURERS' INSTALLATION GUIDE FOR JOIST BRACING DURING ERECTION.

REFER TO MANUFACTURERS' INSTALLATION GUIDE FOR JOIST BRIDGING REQUIREMENTS.

ROOF SHEATHING

ROOF SHEATHING SHALL BE 23/32" (3/4" NOMINAL) TONGUE AND GROOVE STURD-I-FLOORAPA RATED SHEATHING, EXPOSURE 1, 48/24.

MANSARD ROOF SHEATHING SHALL BE 19/32" (5/8" NOMINAL) APA RATED SHEATHING, EXPOSURE 1, 40/20.

ALL ROOF SHEATHING SHALL BE FASTENED TO SUPPORTING MEMBERS W/10d NAILS @ 6" O.C. AT PANEL EDGES, AND 12" O.C. AT INTERMEDIATE SUPPORTS. U.N.O.

LIGHT GAGE METAL FRAMING

16 GA. AND HEAVIER STUDS SHALL HAVE A MINIMUM YIELD STRESS OF 50,000 PSI. 18 GA. AND LIGHTER STUDS AND TRACKS SHALL HAVE A MINIMUM YIELD STRESS OF 33,000 PSI.

STUDS AND TRACKS SHALL BE 18 GA. MINIMUM U.N.O. THEY SHALL BE MANUFACTURED BY DIETRICH INDUSTRIES, INC. OR APPROVED EQUAL.

PROVIDE DOUBLE STUDS FOR FULL HEIGHT OF WALL EACH SIDE OF ALL OPENINGS UNLESS OTHERWISE NOTED. WELD STUDS TO EACH OTHER WITH 1 1/2" LONG 1/8" FILLET WELDS AT 12" O.C. EACH SIDE. PROVIDE STUD TRACK AT EACH HEAD AND SILL.

REFER TO PLANS AND DETAILS FOR CONNECTION OF STUD WALLS TO FOUNDATION, FLOOR OR ROOF.

ALL LIGHT GAGE METAL FRAMING SHALL BE G90 GALVANIZED.

SPECIAL INSPECTIONS

SPECIAL INSPECTIONS SHALL BE PERFORMED IN ACCORDANCE WITH SECTION 1704 OF THE 2003 IBC AND THE OWNER SHALL EMPLOY ONE OR MORE SPECIAL INSPECTORS TO PROVIDE INSPECTIONS DURING CONSTRUCTION ON THE TYPES OF WORK LISTED UNDER SECTION 1704. THE FOLLOWING AREAS OF WORK REQUIRE SPECIAL INSPECTIONS IN ACCORDANCE WITH THE LISTED 2003 IBC SECTIONS/LOCATIONS:

1. SOILS - SECTION 1704.7 FOR SOILS REPORT COMPLIANCE.
2. CONCRETE - ITEM #1 ON TABLE 1704.4 FOR PLACEMENT OF REINFORCED CONCRETE,ITEM #4 ON TABLE 1704.4 FOR DESIGN MIX, ITEM #5 ON TABLE1704.4 FOR STRENGTH TESTS, ITEM #6 ON TABLE 1704.4 FOR PLACEMENT OF REINFORCING STEEL AND ITEM #2B ON TABLE 1704.5.1 FOR ANCHOR BOLT TYPE, SIZE AND LOCATION.
3. STRUCTURAL STEEL- ITEM #2 ON TABLE 1704.3 FOR HIGH STRENGTH BOLTS AND SECTION 1704.2 FOR INSPECTION OF FABRICATORS.
4. WELDING - ITEM #5 ON TABLE 1704.3 FOR INSPECTION OF WELDS, ITEM #6 ON TABLE 1704.3 FOR K-BRACE CONNECTIONS AND SECTION 1704.3.1 FOR COMPLIANCE AND QUALIFICATION OF WELDS.

MISCELLANEOUS

ALL DIMENSIONS ON STRUCTURAL DRAWINGS TO BE CHECKED AGAINST ARCHITECTURAL, MECHANICAL AND ELECTRICAL DRAWINGS BY THE GENERAL CONTRACTOR AND ANY DISCREPANCIES ARE TO BE REPORTED TO THE ARCHITECT IMMEDIATELY.

THE CONTRACTOR SHALL ASSUME RESPONSIBILITY, UNRELIEVED BY REVIEW OF SHOP DRAWINGS OR PERIODIC OBSERVATION OF CONSTRUCTION, FOR COMPLIANCE WITH THE CONTRACT DOCUMENTS, FOR FABRICATION PROCESSES AND CONSTRUCTION TECHNIQUES, AND FOR SAFE CONDITIONS ON THE JOB SITE.

DO NOT SCALE THE DRAWINGS.

SHOP DRAWINGS

SHOP DRAWING SUBMITTALS SHALL CONSIST OF A MINIMUM OF 1 REPRODUCIBLE AND 1 BLUE PRINT OF EACH DRAWING.

SHOP DRAWINGS SHALL BE REVIEWED BY CONTRACTOR TO VERIFY THAT SUBMITTAL IS COMPLETE PRIOR TO SUBMITTING TO ARCHITECT/ENGINEER.

DRAWINGS CREATED BY THE McDONALD'S CORPORATION CANNOT BE REPRODUCED AND/OR USED AS A SHOP DRAWING SUBMITTAL.

SHOP DRAWING SUBMITTALS SHALL INCLUDE THE FOLLOWING:

1. CONCRETE MIX DESIGN
2. FOUNDATION REINFORCING BARS
3. STRUCTURAL STEEL
4. PARALLEL STRAND LUMBER (PSL)
5. LAMINATED VENEER LUMBER (LVL)
6. LAMINATED STRAND LUMBER (LSL)
7. SAWN LUMBER AND CONNECTORS
8. LT. GAGE METAL FRAMING
9. ROOF SHEATHING
10. OPEN WEB WOOD JOISTS

REVISIONS

NO.	DATE	BY
1		
2	2-7-08 FND SYSTEM	TEA
3		
4		
5		
6		
7		

Landry ARCHITECTS
389 Main Street - Salem, NH 03079
T 603.890.6414 F 603.894.4358
www.landrycreativeinc.com

DRAWN BY: T.E.A.
CHECKED BY: D.A.D.
DATE DRAWN: 06/01/07
DATE ISSUED: 08/14/07
SCALE: AS NOTED
JOB NUMBER: M-1032

CONSULTANT:
DUBOIS ENGINEERING ASSOCIATES, INC.
CONSULTING ENGINEERS: STRUCTURAL, FORENSIC
117 HARRISON STREET, MANCHESTER, NH 03104
PH: (603) 666-0900 FAX: (603) 669-0900

SHEET TITLE:
COLUMN SCHED AND GENERAL NOTES

McDonald's

RESTAURANT LOCATION:
332 St. John Street
PORTLAND, ME

PREPARED FOR:
McDonald's USA, LLC
McDONALD'S PLAZA
OAK BROOK, ILLINOIS
60521

SHEET NUMBER:
S-4.0