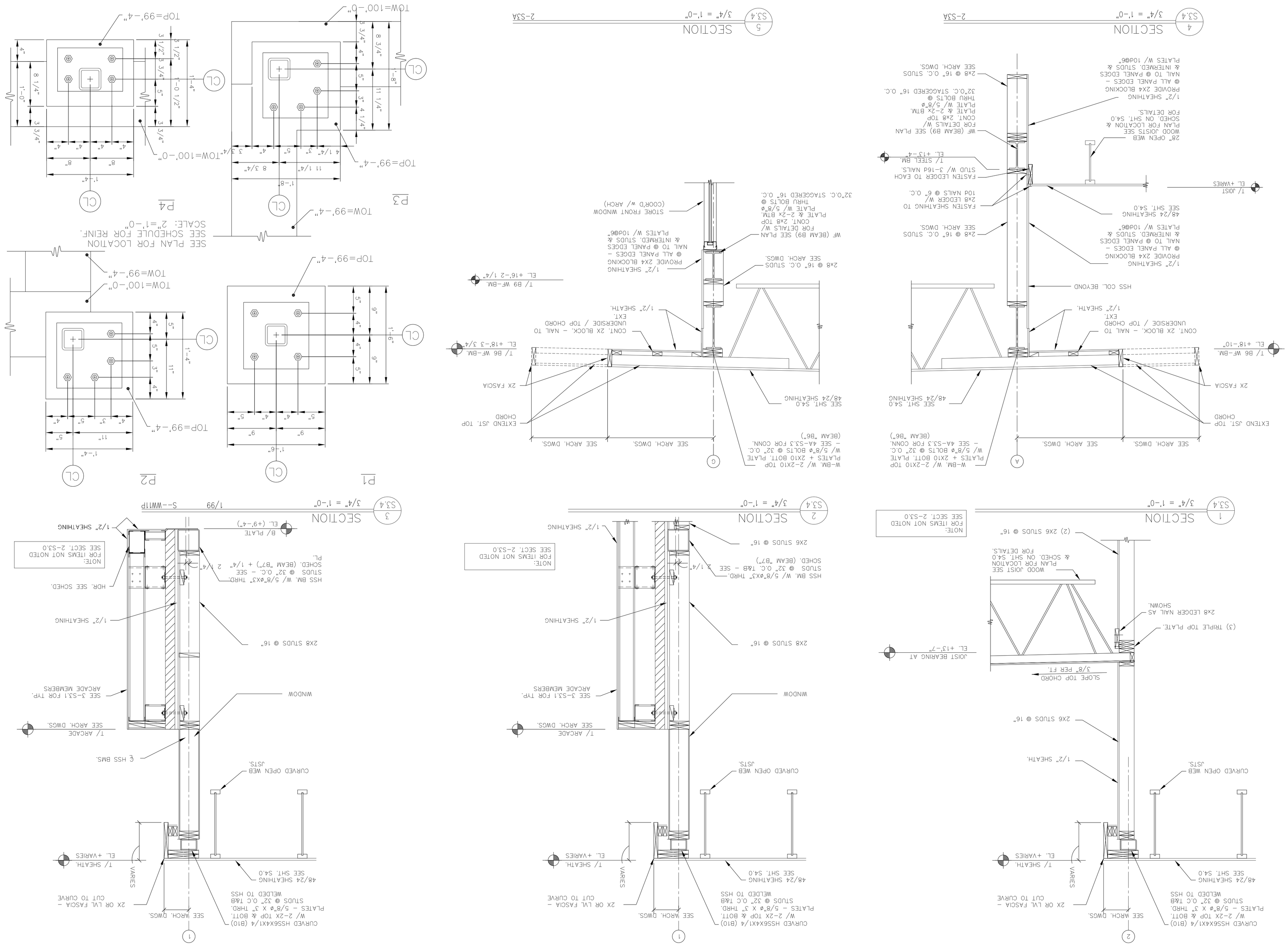

RESTAURANT LOCATION:
332 St. John Street
PORTLAND, ME

SHEET TITLE:
SECTIONS AND DETAILS

PREPARED FOR:
McDONALD'S USA, LLC
McDONALD'S PLAZA
OAK BROOK, ILLINOIS
60521

SHEET NUMBER:
S-3.4

CONSULTANT:
DUBOIS ENGINEERING ASSOCIATES, INC.
CONSULTING ENGINEERS: STRUCTURAL, FORENSIC
117 HARRISON STREET, MANCHESTER, NH 03104
PH: (603) 666-0900 FAX: (603) 669-0900

Landry ARCHITECTS
389 Main Street - Salem, NH 03079
T 603.890.6414 F 603.894.4358
www.landryarchitects.com

DRAWN BY:	T.E.A.
CHECKED BY:	D.A.D.
DATE DRAWN:	06/01/07
DATE ISSUED:	08/14/07
SCALE:	AS NOTED
JOB NUMBER:	M-1032

REVISIONS

NO.	DATE	BY
1		
2	2-7-08	FND SYSTEM TEA
3		
4		
5		
6		
7		