AXONOMETRIC PLAN NOTES

AXONOMETRIC VIEWS ARE FOR REFERENCE AND INTENDED TO SHOW PRIMARY STRUCTURAL ELEMENTS ONLY. VIEWS DO NOT NECESSARILY INCLUDE ELEMENTS SUCH AS MISCELLANEOUS STEEL, DECK AND SLABS, OR EXTERIOR RAMPS AND STAIRS. REFER TO ALL PLANS, DETAIL SHEETS, AND ARCHITECTURAL DRAWINGS FOR ADDITIONAL INFORMATION.

14 CANOPY AXONOMETRIC

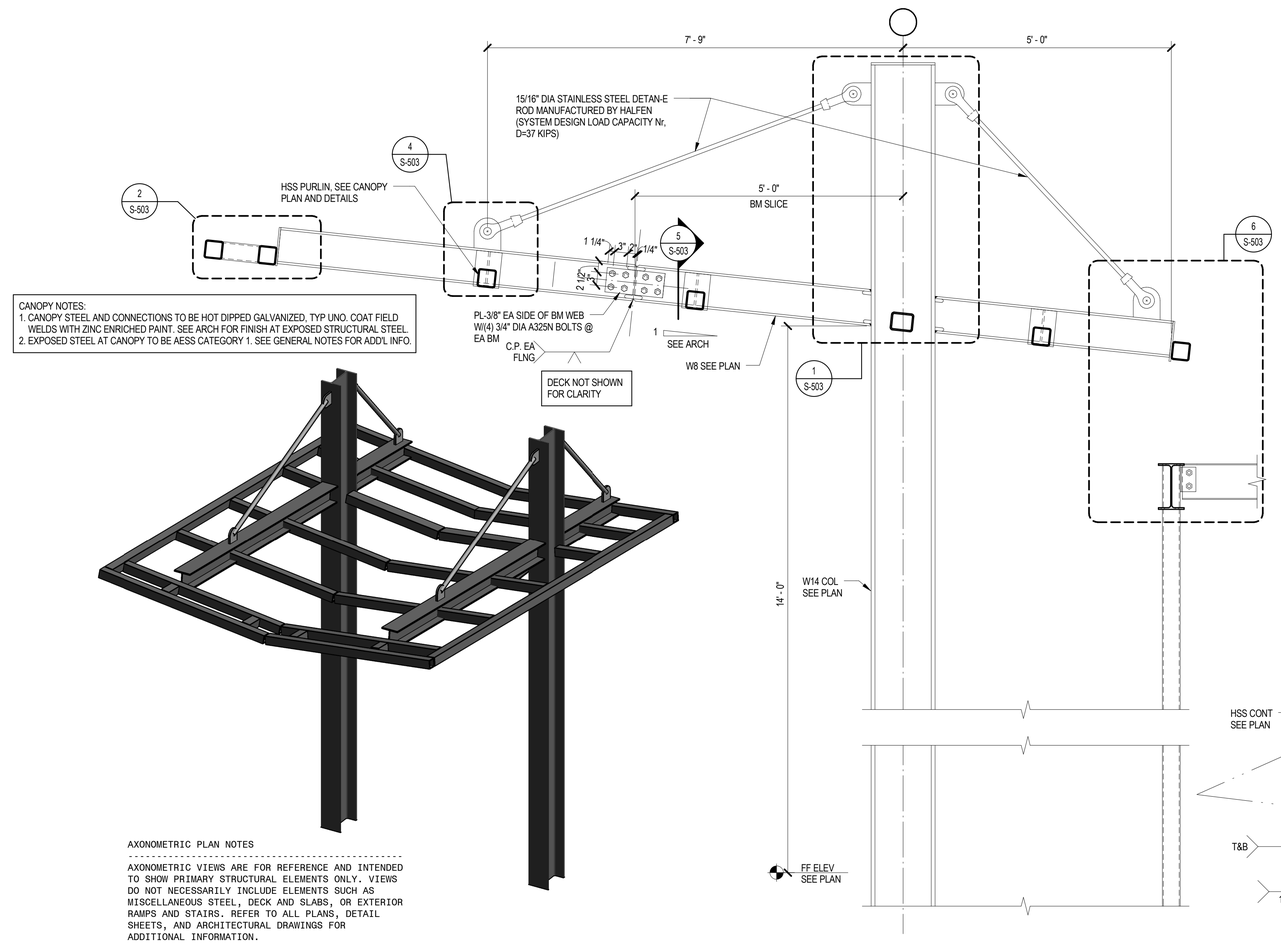

CANOPY NOTES:
1. CANOPY STEEL AND CONNECTIONS TO BE HOT DIPPED GALVANIZED, TYP UNO. COAT FIELD WELDS WITH ZINC ENRICHED PAINT. SEE ARCH FOR FINISH AT EXPOSED STRUCTURAL STEEL.
2. EXPOSED STEEL AT CANOPY TO BE AESS CATEGORY 1. SEE GENERAL NOTES FOR ADD'L INFO.

8 CANOPY ELEVATION

3/4" = 1'-0"

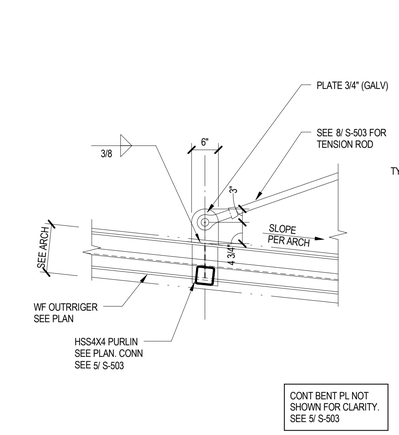

4

3/4" = 1'-0"

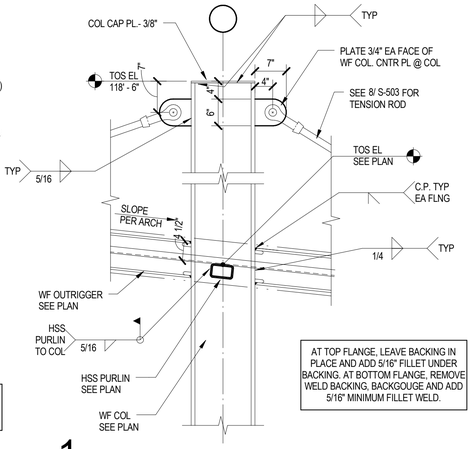

1

3/4" = 1'-0"

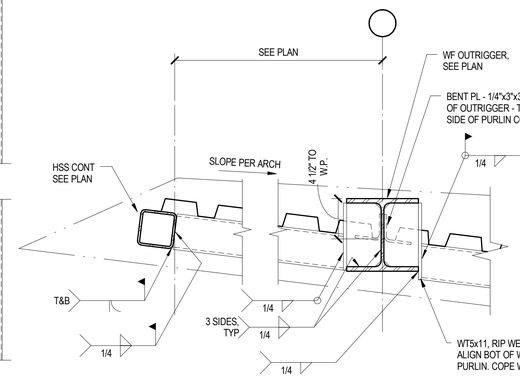

5

1 1/2" = 1'-0"

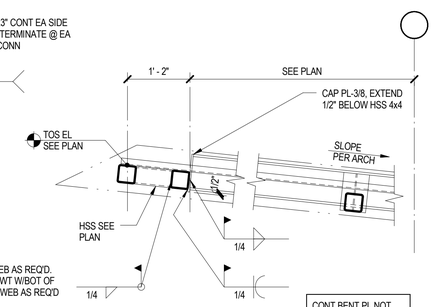

2

3/4" = 1'-0"

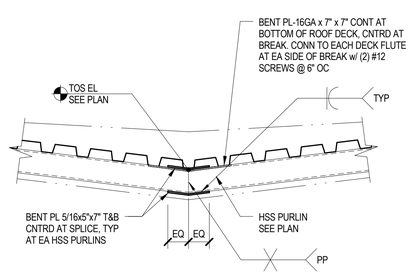

7

1" = 1'-0"

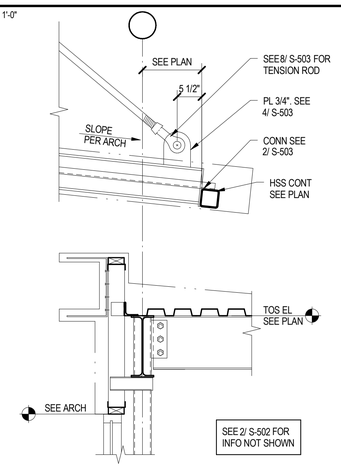

6

3/4" = 1'-0"

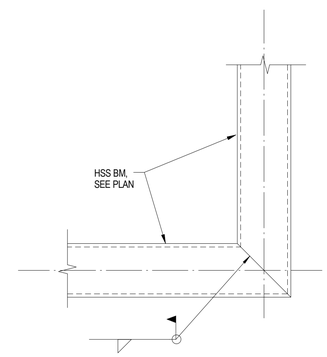

PLAN VIEW

3

1 1/2" = 1'-0"

L.A. FUESS PARTNERS, INC.
Structural Engineers
101 Federal Street, Suite 502 • Boston, MA 02110
617.948.5700 • www.lafp.com
LAFP PROJECT NO. 17044

Project:

LaQUINTA INNS & SUITES

PORTLAND LaQUINTA INN & SUITES - LQ #2049 RENOVATION

340 Park Ave, Portland, ME 04102

2049

Project Owner:

LQ MANAGEMENT, LLC

909 HIDDEN RIDGE, SUITE 600 IRVING, TEXAS 75038

Architect:

BMA
Architectural Group
Professional Corporation
Architects ▪ Designers ▪ Planners

12 Middle Street
Amherst, New Hampshire 03031
TEL 603 673 1991 FAX 603 672 1385
www.bmaworld.com

Seal:

STATE OF MAINE
AARON ANDREW FORD
No. 12471
LICENSED
PROFESSIONAL ENGINEER
6-30-17

BMA COPYRIGHT:

These plans are copyrighted and are subject to copyright protection as an "architectural work" under Sec. 102 of the Copyright Act, 17 U.S.O. as amended December 1990 and known as Architectural Works Copyright Protection Act of 1990. The protection includes but is not limited to the overall form as well as the arrangement and composition of spaces and elements of the design. Under such protection, unauthorized use of these plans, work or home represented, can legally result in the cessation of construction or buildings being seized and/or monetary compensation to BMA Architectural Group, P.C.

REVISIONS

Job Number:	3044
Drawn By:	AN
Checked By:	AM
Phase:	CANOPY DOCUMENTS

Drawing Title:

CANOPY DETAILS

SHEET NUMBER:

S-503

DATE: JUNE 30, 2017