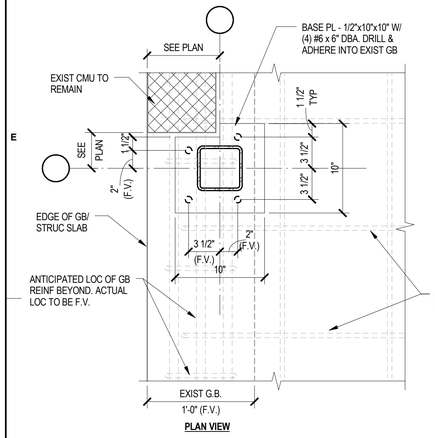


PLAN VIEW

**EMBED INSTALLATION PROCEDURE:**

1. LOCATE EXIST REINFORCING.
2. CHIP TOP OF CONCRETE TO COLUMN BEARING ELEVATION
3. SPECIAL CARE SHALL BE TAKEN TO AVOID ANY DAMAGE TO THE REINF OF THE EXIST SLAB & GRADE BEAM. ADJUST DBA LOCATION ±1" AS REQD. MAINTAIN SPECIFIED DBA SPACING.
4. DRILL HOLE FOR SPECIFIED DBAs PRIOR TO EMBED FABRICATION.
5. FABRICATE PLATES TO MATCH DRILLED HOLE LOCATIONS. EPOXY GROUT DBAs INTO PLACE AND INSTALL BASE PL.

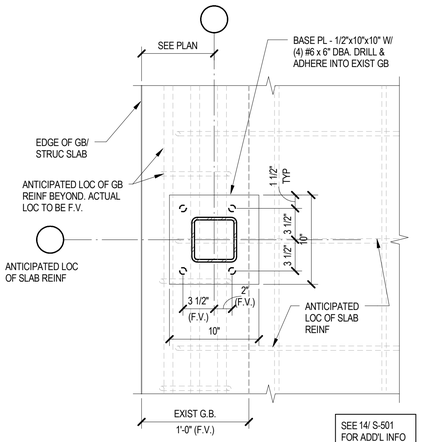


PLAN VIEW

SEE 14/ S-501 FOR ADD'L INFO

## 10 C1B COLUMN BASE PLATE

1 1/2" = 1'-0"

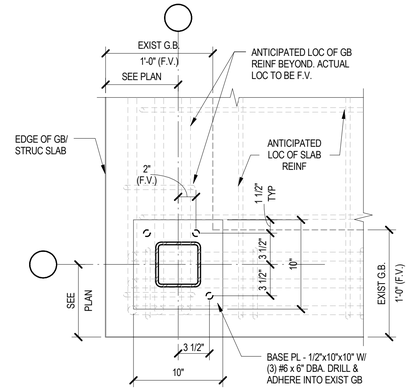


PLAN VIEW

SEE 14/ S-501 FOR ADD'L INFO

## 7 C1 COLUMN BASE PLATE

1 1/2" = 1'-0"

**STEEL COLUMN SCHEDULE**

| WT | COL SIZE | BASE PLATE DIMENSIONS | | | | | | ANCHOR BOLTS | | | |
|---|---|---|---|---|---|---|---|---|---|---|---|
| | | DIM "A" | DIM "B" | t | DIM "C" | DIM "D" | DETAIL | NUMBER | TYPE | DIA | EMBED LENGTH |
| C1 | HSS5 x5 x 5/16 | <---------- | SEE DETAIL | ---------- | ----------> | | 7&14/S-501 | 3 | SEE DETAIL | 3/4" | 6" |
| C1A | HSS5 x 5 x 5/16 | <---------- | SEE DETAIL | ---------- | ----------> | | 14/S-501 | 4 | SEE DETAIL | 3/4" | 6" |
| C1B | HSS 5 x 5 x 5/16 | <---------- | SEE DETAIL | ---------- | ----------> | | 10&14/S-501 | 4 | SEE DETAIL | 3/4" | 6" |
| C2 | W14x82 | <---------- | SEE DETAIL | ---------- | ----------> | | 14/S-502 | 6 | SEE DETAIL | 1 1/4" | 2' - 0" |

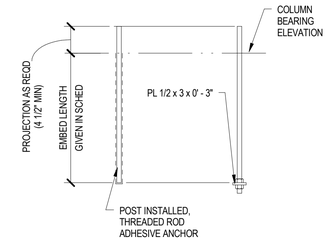


## 1 ANCHOR BOLT TYPES TYPICAL DETAIL

NO SCALE TD05102

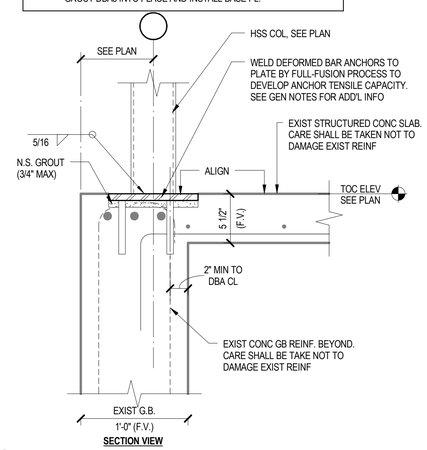


SECTION VIEW

## 14 C1A COLUMN BASE PLATE

1 1/2" = 1'-0"

## SIMPLE SHEAR CONNECTION FLOW CHART

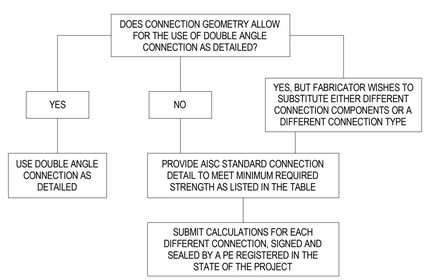


| BEAM SIZE | MINIMUM CONNECTION DESIGN STRENGTH (LRFD, KIPS) | |
|---|---|---|
| | STANDARD | HEAVY |
| W8 | 17 | N.A. |
| W10 | 21 | N.A. |
| W12 | 28 | 38 |
| W14 | 46 | 58 |
| W16 | 50 | 66 |
| W18 | 78 | 94 |
| W21 | 92 | 130 |
| W24 | 128 | 170 |
| W27 | 150 | 230 |
| W30 | 181 | 260 |
| W33 | 215 | 300 |
| W36 | 242 | 308 |

NOTES:

1. EXTENDED CONNECTIONS (IN WHICH THE END OF THE SUPPORTED BEAM STOPS SHORT OF THE COLUMN OR GIRDER FLANGES) ARE NOT ALLOWED, UNLESS SPECIFICALLY DETAILED IN THE DRAWINGS.

NOTES:

1. WELD A IS 3/16" FOR STANDARD 1/4" FOR HEAVY.
2. BOLTS ARE ASTM A325N U N.O
3. BEAM CONNS ARE STANDARD UNLESS DENOTED BY AN ASTERISK ( * ) ON PLAN.

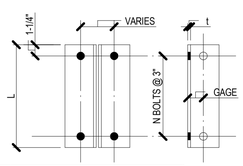


| BEAM SIZE | STANDARD | | HEAVY | |
|---|---|---|---|---|
| | ANGLE LENGTH (L) | NO. OF ROWS OF BOLTS (N) | ANGLE LENGTH (L) | NO. OF ROWS OF BOLTS (N) |
| W8, W10 | 5-1/2" | 2 | N.A. | N.A. |
| W12 | 5-1/2" | 2 | 8-1/2" | 3 |
| W14, W16 | 8-1/2" | 3 | 11-1/2" | 4 |
| W18 | 11-1/2" | 4 | 14-1/2" | 5 |
| W21 | 11-1/2" | 4 | 17-1/2" | 6 |
| W24 | 14-1/2" | 5 | 20-1/2" | 7 |
| W27 | 14-1/2" | 5 | 23-1/2" | 8 |
| W30 | 17-1/2" | 6 | 26-1/2" | 9 |
| W33 | 20-1/2" | 7 | 29-1/2" | 10 |
| W36 | 23-1/2" | 8 | 29-1/2" | 10 |

REFER TO AISC TABLES 10-1 & 10-2.

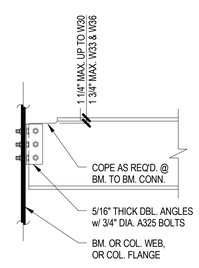


BOLTED/BOLTED CONN.

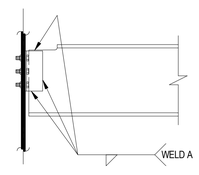


BOLTED/WELDED CONN.

## 12 SIMPLE SHEAR STEEL BEAM CONN. TYPICAL DETAIL

NO SCALE TD05200

| BEAM SIZE | BOLTS (N) | SHEAR TAB THICKNESS | CAPACITY (LRFD, K) |
|---|---|---|---|
| W8 | 2 | 3/8" | 20 |
| W10 | 2 | 3/8" | 23 |
| W12 | 3 | 3/8" | 36 |
| W14 | 3 | 3/8" | 42 |
| W16 | 4 | 3/8" | 61 |
| W18 | 5 | 3/8" | 81 |

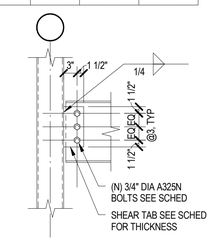


PROVIDE 1/4 " CAP PLATE AT TOP OF COL TYP, UNO

## 5 ROOF BEAM TO COLUMN CONN TYPICAL DETAIL

NO SCALE

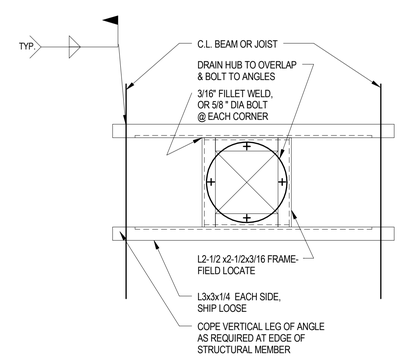


PLAN VIEW

CONTRACTOR TO COORDINATE FRAME SIZES REQUIRED FOR DRAIN HUBS

## 6 ROOF DRAIN SUPPORT FRAME TYPICAL DETAIL

NO SCALE TD05616

MEANS OF LEVELING & ELEVATION CONTROL SHALL BE PROVIDED & COORDINATED BY THE CONTRACTOR

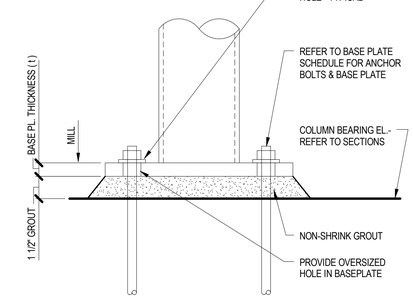


ELEVATION

## 2 COLUMN BASE PLATE TYPICAL DETAIL

NO SCALE TD05121

REFER TO BASE PLATE SCHEDULE FOR DIMENSIONS. DIMENSIONS C & D APPLY ONLY IF SCHEDULED

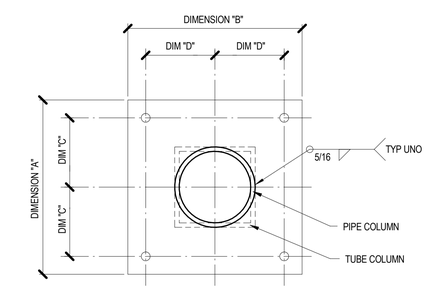


PLAN VIEW

## 3 COLUMN BASE PLATE TYPICAL DETAIL

NO SCALE


L.A. FUESS PARTNERS, INC.
Structural Engineers
101 Federal Street, Suite 502 • Boston, MA 02110
617.948.5700 • www.lafp.com
LAFP PROJECT NO. 17044


Project:

LaQUINTA INNS & SUITES

**PORTLAND LaQUINTA INN & SUITES - LQ #2049 RENOVATION**

340 Park Ave, Portland, ME 04102

2049

Project Owner:

**LQ MANAGEMENT, LLC**

909 HIDDEN RIDGE, SUITE 600 IRVING, TEXAS 75038


Architect:

BMA Architectural Group
Professional Corporation
Architects ■ Designers ■ Planners

12 Middle Street
Amherst, New Hampshire 03031
TEL 603 673 1991 FAX 603 672 1385
www.bmaworld.com


Seal:

STATE OF MAINE AARON ANDREW FORD No. 12471 LICENSED PROFESSIONAL ENGINEER 6-28-17


**BMA COPYRIGHT:**

These plans are copyrighted and are subject to copyright protection as an "architectural work" under Sec. 102 of the Copyright Act, 17 U.S.O. as amended December 1990 and known as Architectural Works Copyright Protection Act of 1990. The protection includes but is not limited to the overall form as well as the arrangement and composition of spaces and elements of the design. Under such protection, unauthorized use of these plans, work or home represented, can legally result in the cessation of construction or buildings being seized and/or monetary compensation to BMA Architectural Group, P.C.


**REVISIONS**

| | |
|---|---|
| Job Number: | 3044 |
| Drawn By: | AN |
| Checked By: | AM |
| Phase: | CANOPY DOCUMENTS |

Drawing Title:

**DETAILS**

SHEET NUMBER:

**S-501**

DATE: JUNE 30, 2017