MECHANICAL KEYNOTES	
NOTE	DESCRIPTION
M02	RECONNECT TO EXISTING EXHAUST DUCTWORK
M04	INSTALL NEW SIDEWALL SUPPLY AIR REGISTER
M05	INSTALL NEW VOLUME DAMPER FULL SIZE OF DUCTWORK
M06	INSTALL NEW FIRE DAMPER FULL SIZE OF DUCTWORK
M07	INSTALL NEW PUMPED CONDENSATE DRAIN TO LAUNDRY ROOM
M11	INSTALL NEW THERMOSTAT
M16	FOR INSTALLATION SEE RETURN/EXHAUST GRILLE CONNECTION DETAIL ON SHEET M-500
M18	FOR INSTALLATION SEE LOUVER INSTALLATION DETAIL ON SHEET M-500
M21	FOR INSTALLATION SEE VERTICAL AIR HANDLING UNIT DETAIL ON SHEET M-501
M28	INSTALL NEW SMOKE DAMPER IN DUCTWORK
M30	INSTALL NEW LOUVER AND SEAL WEATHER TIGHT
M31	INSTALL NEW MOTORIZED DAMPER FULL SIZE OF DUCT & RELAY LINK
M32	INSTALL NEW SIDEWALL SUPPLY AIR FAN, WALL HOUSING MOUNT, BACKDRAFT DAMPER, WEATHER HOOD
M33	INSTALL NEW RELAY AND LINK WITH WATER HEATER
M34	INSTALL NEW SUMMER SIDEWALL SUPPLY AIR FAN SWITCH WITH RED INDICATING LIGHT
P17	FOR INSTALLATION SEE CONDENSATE DRAIN DETAIL ON SHEET P-500

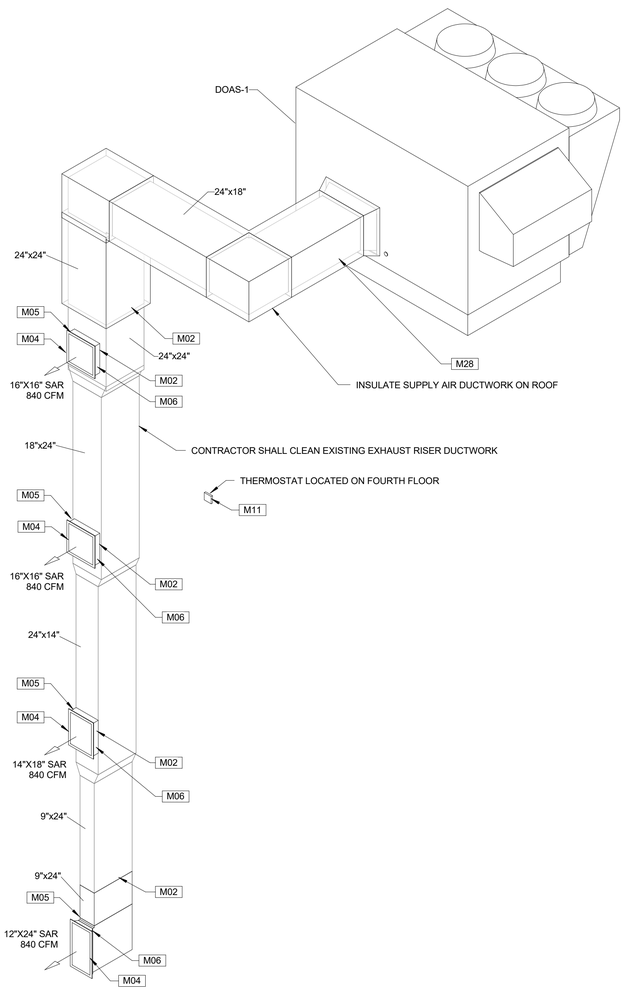

1 MAKE UP AIR RISER DIAGRAM

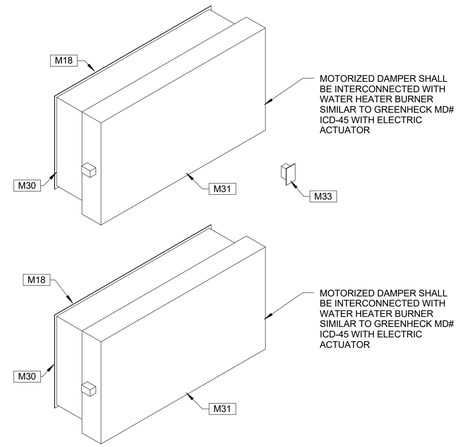

4 WATER HEATER COMBUSTION AIR DAIGRAM

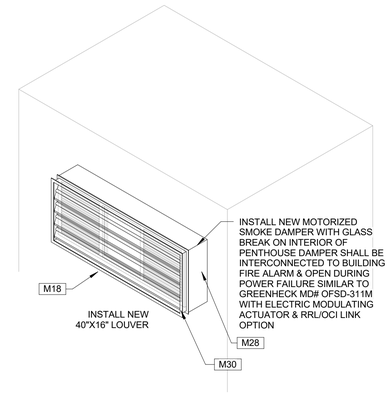

5 PENTHOUSE SMOKE DAMPER DIAGRAM

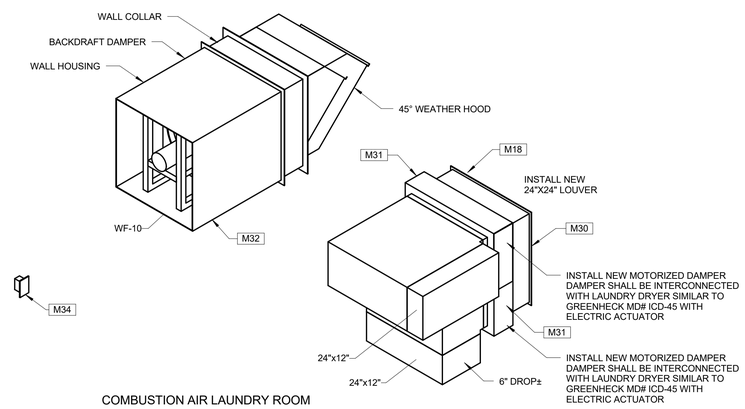

3 COMBUSTION AIR LAUNDRY ROOM DIAGRAM

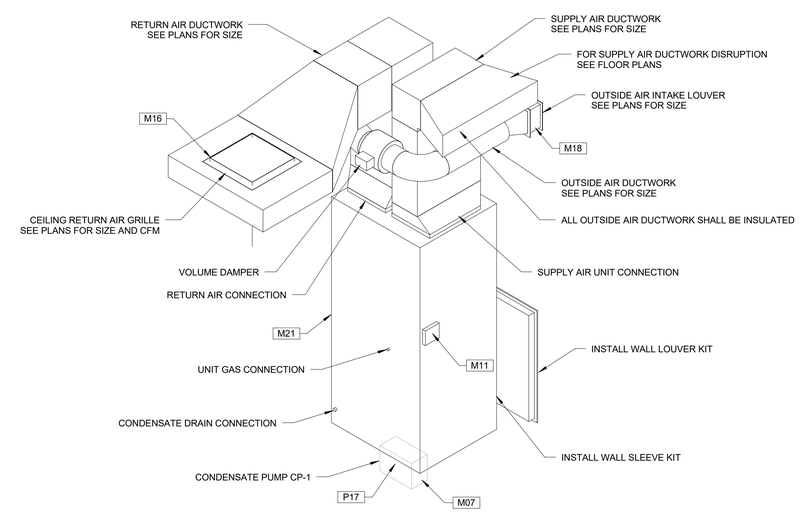

2 VERTICAL PACKAGED UNIT DIAGRAM

Project:

LaQUINTA INNS & SUITES

PORTLAND LaQUINTA INN & SUITES - LQ #2049 RENOVATION

Project Owner:

LQ MANAGEMENT, LLC

909 HIDDEN RIDGE, SUITE 600 IRVING, TEXAS 75038

Architect:

BMA Architectural Group
Professional Corporation
Architects ■ Designers ■ Planners

12 Middle Street
Amherst, New Hampshire 03031
TEL 603 673 1991 FAX 603 672 1385
www.bmaworld.com

Seal:

STATE OF MAINE
JOHN KARPINSKI
No. 5376
LICENSED
PROFESSIONAL ENGINEER

ENGINEER:

IES inc.
INTEGRATED ENGINEERED SYSTEMS, INC.
△ MECH. DESIGN
△ ENERGY MGT.
△ INDOOR AIR QUALITY
P.O. BOX 657
AUBURN, N.H. 03032
Tel: (603) 625-1346
Fax: (603) 625-8456

REVISIONS

Job Number:	J799
Drawn By:	CLB
Checked By:	JK
Phase:	Lobby and ADA Documents

Drawing Title:

MECHANICAL RISER DIAGRAMS

SHEET NUMBER:

M-400

DATE: 10 APRIL 2017