MODIFICATIONS TO EXISTING ONE LINE POWER RISER DIAGRAM

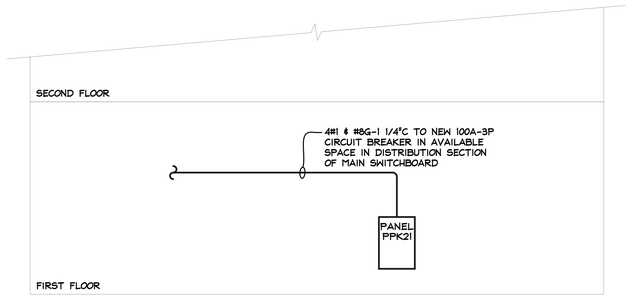

PANEL: PPK21 MOUNTING: SURFACE TOTAL POLES: 42

PHASE: 3 WIRES: 4 A.I.C. 10 K VOLTAGE: 120/208 MAINS: 100A-3P M.C.B.

DESCRIPTION OF LOADS	KVA LOAD A∅	KVA LOAD B∅	KVA LOAD C∅	BREAKER FRAME	BREAKER TRIP	BREAKER POLES	CKT	ABC	CKT	BREAKER POLES	BREAKER TRIP	BREAKER FRAME	KVA LOAD A∅	KVA LOAD B∅	KVA LOAD C∅	DESCRIPTION OF LOADS
RECEPTACLES	1.5			100	20	1	1		2	1	20	100	1.8			MICROWAVE
SPARE				↑	↑	↑	3		4	–	–	–		1.8		–
↑				100	15	1	5		6	1	40	100			3.8	DISHWASHER
2 DOOR FRIDGES	1.4			100	20	1	7		8	–	–	–	3.8			–
RECEPTACLES		1.5					9		10	1	20	100		1.5		BREAKFAST RM Φ
↑			1.2				11		12					1.5		↑
BREAKFAST RM Φ	1.5						13		14				1.5			
		1.5					15		16					1.5		
			1.5				17		18					1.5		↓
	1.5						19		20				.1			EF-11
↓		1.5					21		22					1.5		PRINT STATION
ELEC FIREPLACE			1.5				23		24					1.5		↑
FITNESS ROOM	1.2						25		26				.2			RESTROOM Φ
		1.2					27		28					1.5		WORK AREA Φ
			1.5				29		30					1.2		VENDING
	1.5						31		32				1.2			↑
		1.5					33		34					1.2		RECEPTION DESK
↓			1.5				35		36						1.2	POWER DOORS
GUEST WASHER	1.2						37		38							SPARE
GUEST DRYER		1.2					39		40							
SPARE				↓	↓	↓	41		42	↓	↓	↓				↑

PHASE A: 18.4 PHASE B: 17.4 PHASE C: 17.9 TOTAL: 54.7

TYPICAL DEVICE MOUNTING HEIGHTS DETAIL

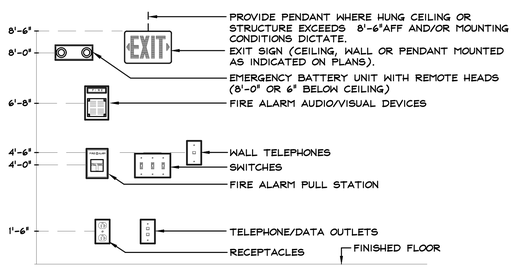

NOTES:
1. ALL MOUNTING HEIGHTS SHALL BE MEASURED FROM FINISHED FLOOR TO CENTERLINE OF DEVICES EXCEPT EXIT SIGNS.
2. DEVICES SHALL BE INSTALLED ON A COMMON VERTICAL CENTERLINE WHEREVER POSSIBLE.
3. ALL DEVICES SHALL BE INSTALLED AT MOUNTING HEIGHTS AS INDICATED ON THIS DETAIL UNLESS OTHERWISE NOTED.

TYPICAL DEVICE BOX INSTALLATION @ METAL STUD

NOTE: PROVIDE METAL STUD BONDING AS PER ARTICLE 250 REQUIREMENTS.

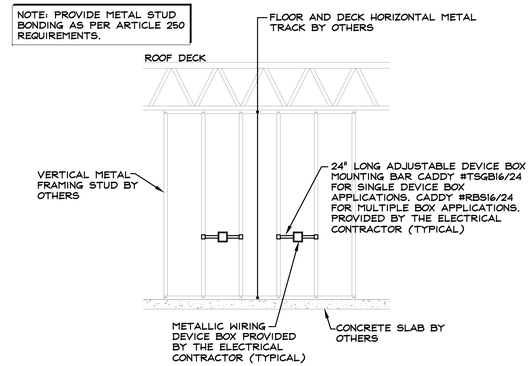

TYPICAL MULTIPLE OCCUPANCY SENSOR CONTROL WIRING DIAGRAM

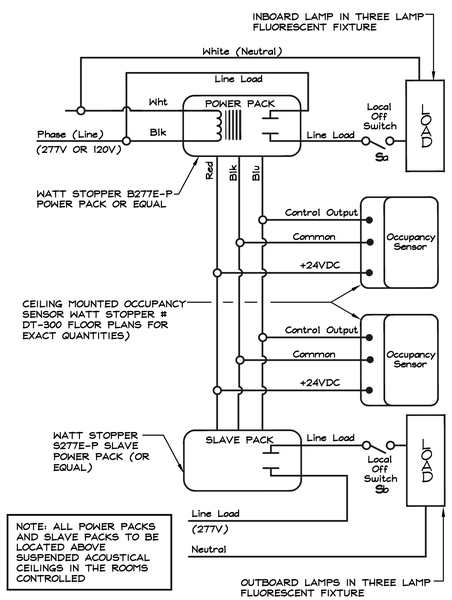

NOTE: ALL POWER PACKS AND SLAVE PACKS TO BE LOCATED ABOVE SUSPENDED ACOUSTICAL CEILINGS IN THE ROOMS CONTROLLED

TYPICAL HEARING IMPAIRED UNIT PUSHBUTTON DETAIL

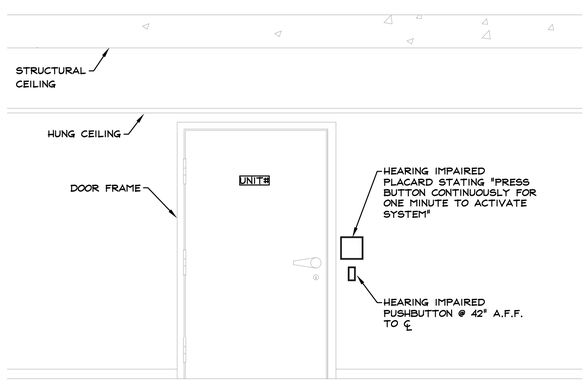

TYPICAL HEARING IMPAIRED ROOM DOORBELL SYSTEM WIRING DIAGRAM

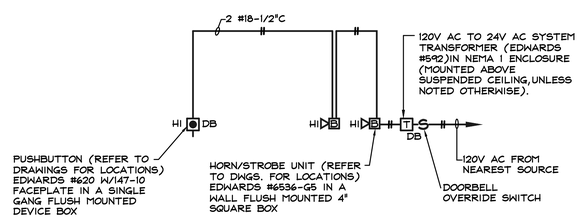

Project:

LaQUINTA INNS & SUITES

PORTLAND LaQUINTA INN & SUITES LQ #2049 RENOVATION

340 Park Ave, Portland, ME 04102

psmfi

Project Owner:

LQ MANAGEMENT, LLC

909 HIDDEN RIDGE, SUITE 600 IRVING, TEXAS 75038

Architect:

BMA Architectural Group
Professional Corporation
Architects ■ Designers ■ Planners
12 Middle Street
Amherst, New Hampshire 03031
TEL 603 673 1991 FAX 603 672 1385
www.bmaworld.com

Seal:

STATE OF MAINE JOHN A. HARRIER LICENSED PROFESSIONAL ENGINEER

BMA COPYRIGHT:
These plans are copyrighted and are subject to copyright protection as an "architectural work" under Sec. 102 of the Copyright Act, 17 U.S.O. as amended December 1990 and known as Architectural Works Copyright Protection Act of 1990. The protection includes but is not limited to the overall form as well as the arrangement and composition of spaces and elements of the design. Under such protection, unauthorized use of these plans, work or home represented, can legally result in the cessation of construction or buildings being seized and/or monetary compensation to BMA Architectural Group, P.C.

REVISIONS

Job Number:	216266
Drawn By:	BL
Checked By:	RFG/JH
Phase:	PROGRESS SET

Drawing Title:

DETAIL SHEET

SHEET NUMBER: E4.0

DATE: 27 JANUARY 2017