1.0 EROSION CONTROL MEASURES AND SITE STABILIZATION

AS PART OF THE SITE DEVELOPMENT, THE FOLLOWING TEMPORARY AND PERMANENT EROSION AND SEDIMENTATION CONTROL DEVICES SHALL BE IMPLEMENTED. DEVICES SHALL BE INSTALLED AS DESCRIBED IN THIS REPORT OR WITHIN THE PLAN SET. SEE THE MAINE EROSION AND SEDIMENT CONTROL HANDBOOK FOR CONSTRUCTION: BEST MANAGEMENT PRACTICES FOR FURTHER REFERENCE.

1.1 TEMPORARY EROSION CONTROL MEASURES

THE FOLLOWING TEMPORARY EROSION AND SEDIMENTATION CONTROL MEASURES ARE PLANNED FOR THE PROJECT'S CONSTRUCTION PERIOD:

1.1.1 CRUSHED STONE STABILIZED CONSTRUCTION ENTRANCES SHALL BE PLACED AT ALL ACCESS POINTS TO THE PROJECT SITE WHERE THERE ARE DISTURBED AREAS. THE FOLLOWING SPECIFICATIONS SHALL BE FOLLOWED AT A MINIMUM:
- STONE SIZE SHALL BE 2–3 INCHES, OR RECLAIMED OR RECYCLED CONCRETE EQUIVALENT.
- THE THICKNESS OF THE ENTRANCE STONE LAYER SHALL BE NO LESS THAN 6 INCHES.
- THE ENTRANCE SHALL NOT BE LESS THAN 20 FEET WIDE, HOWEVER NOT LESS THAN THE FULL WIDTH OF POINTS WHERE INGRESS OR EGRESS OCCURS. THE LENGTH SHALL NOT BE LESS THAN 50 FEET IN LENGTH.
- GEOTEXTILE FABRIC (WOVEN OR NON–WOVEN) SHALL BE PLACED OVER THE ENTIRE ENTRANCE AREA.
- THE ENTRANCE/EXIT SHALL BE MAINTAINED TO THE EXTENT THAT IT WILL PREVENT THE TRACKING OF SEDIMENT ONTO PUBLIC ROAD WAYS.

1.1.2 SILTATION FENCE OR EROSION CONTROL BERM SHALL BE INSTALLED DOWN GRADIENT OF ANY DISTURBED AREAS TO TRAP RUNOFF BORNE SEDIMENTS UNTIL PERMANENT STABILIZATION IS ACHIEVED. THE SILT FENCE OR EROSION CONTROL BERM SHALL BE INSTALLED PER THE DETAILS PROVIDED IN THE PLAN SET AND INSPECTED BEFORE AND IMMEDIATELY AFTER EACH RAINFALL AND AT LEAST DAILY DURING PROLONGED RAINFALL. REPAIRS SHALL BE MADE IF THERE ARE ANY SIGNS OF EROSION OR SEDIMENTATION BELOW THE FENCE LINE OR BERM. IF THERE ARE SIGNS OF UNDERCUTTING AT THE CENTER OR THE EDGES, OR IMPOUNDING OF LARGE VOLUMES OF WATER BEHIND THE FENCE OR BERM, THE BARRIER SHALL BE REPLACED WITH A STONE CHECK DAM.

1.1.3 HAY MULCH INCLUDING HYDRO SEEDING IS INTENDED TO PROVIDE COVER FOR DENUDED OR SEEDED AREAS UNTIL REVEGETATION IS ESTABLISHED. MULCH PLACED BETWEEN APRIL 15TH AND NOVEMBER 1ST ON SLOPES OF LESS THAN 15 PERCENT SHALL BE COVERED BY FABRIC NETTING AND ANCHORED WITH STAPLES IN ACCORDANCE WITH THE MANUFACTURER'S RECOMMENDATION. MULCH PLACED BETWEEN NOVEMBER 1ST AND APRIL 15TH ON SLOPES EQUAL TO OR STEEPER THAN 8 PERCENT AND EQUAL TO OR FLATTER THAN 2:1 SHALL USE MATS OR FABRIC NETTING AND ANCHORED WITH STAPLES IN ACCORDANCE WITH THE MANUFACTURER'S RECOMMENDATION.

1.1.4 AT ANY TIME OF THE YEAR, ALL SLOPES GREATER THAN 3:1 SHALL BE STABILIZED WITH DOUBLE NET EROSION CONTROL BLANKET BIONET SC150BN BY NORTH AMERICAN GREEN OR APPROVED EQUAL, OR EROSION CONTROL MIX SLOPE PROTECTION AS DETAILED WITHIN THE PLANS.

1.1.5 VERNON PLACE, AVON STREET, AND CONGRESS STREET SHALL BE SWEPT TO CONTROL MUD AND DUST FROM THE CONSTRUCTION SITE AS NECESSARY. ADD ADDITIONAL STONE TO THE STABILIZED CONSTRUCTION ENTRANCE TO MINIMIZE THE TRACKING OF MATERIAL OFF THE SITE AND ONTO THE SURROUNDING ROADWAYS.

1.1.6 DURING DEMOLITION, CLEARING AND GRUBBING OPERATIONS, STONE CHECK DAMS SHALL BE INSTALLED AT ANY AREAS OF CONCENTRATED FLOW. THE MAXIMUM HEIGHT OF THE CHECK DAM SHALL NOT EXCEED 2 FEET. THE CENTER OF THE CHECK DAM SHALL BE 6 INCHES BELOW THE OUTER EDGES OF THE DAM. THE CONTRACTOR SHALL MULCH THE SIDE SLOPES AND INSTALL STONE CHECK DAMS FOR ALL NEWLY EXCAVATED DITCH LINES WITHIN 24 HOURS OF THEIR CREATION.

1.1.7 SILT FENCE STAKE SPACING SHALL NOT EXCEED 6 FEET UNLESS THE FENCE IS SUPPORTED WITH 14 GAUGE WIRE IN WHICH CASE THE MAXIMUM SPACING SHALL NOT EXCEED 10 FEET. THE SILT FENCE SHALL BE "TOED" INTO THE GROUND.

1.1.8 STORMDRAIN INLET PROTECTION SHALL BE PROVIDED TO STORMDRAINS THROUGH THE USE OF ANY OF THE FOLLOWING: HAY BALE DROP INLET STRUCTURES, SILT FENCE DROP INLET SEDIMENT FILTER, GRAVEL AND WIRE MESH DROP INLET SEDIMENT FILTER, OR CURB INLET SEDIMENT FILTER. BARRIERS SHALL BE INSPECTED AFTER EVERY RAINFALL EVENT AND REPAIRED AS NECESSARY. SEDIMENTS SHALL BE REMOVED WHEN ACCUMULATION HAS REACHED ½ THE DESIGN HEIGHT.

1.1.9 DUST CONTROL SHALL BE ACCOMPLISHED BY THE USE OF ANY OF THE FOLLOWING: WATER, CALCIUM CHLORIDE, STONE, OR AN APPROVED MDEP PRODUCT. DUST CONTROL SHALL BE APPLIED AS NEEDED TO ACCOMPLISH DUST CONTROL.

1.1.10 TEMPORARY LOAM, SEED, AND MULCHING SHALL BE USED IN AREAS WHERE NO OTHER EROSION CONTROL MEASURE IS USED. APPLICATION RATES FOR SEEDING ARE PROVIDED AT THE END OF THIS REPORT.

1.1.11 STOCKPILES SHALL BE STABILIZED WITHIN 7 DAYS OF FORMATION UNLESS A SCHEDULED RAIN EVENT OCCURS PRIOR TO THE 7 DAY WINDOW, IN WHICH CASE THE STOCKPILE SHALL BE STABILIZED PRIOR TO THE RAIN EVENT. METHODS OF STABILIZATION SHALL BE MULCH, EROSION CONTROL MIX, OR EROSION CONTROL BLANKETS/MATS. SILT FENCE OR A WOOD WASTE COMPOST FILTER BERM SHALL BE PLACED DOWNHILL OF ANY SOIL STOCKPILE LOCATION.

1.1.12 FOR DISTURBANCE BETWEEN NOVEMBER 1 AND APRIL 15, PLEASE REFER TO WINTER STABILIZATION PLAN IN THIS REPORT AND THE MAINE EROSION AND SEDIMENT CONTROL BMP MANUAL FOR FURTHER INFORMATION.

1.1.13 IT IS OF THE UTMOST IMPORTANCE THAT STORMWATER RUNOFF AND POTENTIAL SEDIMENT FROM THE CONSTRUCTION SITE BE DIVERTED AROUND THE PROPOSED UNDERDRAINS UNTIL THE TRENCH IS BACKFILLED.

1.2 PERMANENT EROSION CONTROL MEASURES

THE FOLLOWING PERMANENT EROSION CONTROL MEASURES ARE INTENDED FOR POST DISTURBANCE AREAS OF THE PROJECT.

1.2.1 ALL DISTURBED AREAS DURING CONSTRUCTION, NOT SUBJECT TO OTHER PROPOSED CONDITIONS, SHALL RECEIVE A MINIMUM 4" OF LOAM, LIMED, AND MULCHED. EROSION CONTROL BLANKETS OR MATS SHALL BE PLACED OVER THE MULCH IN AREAS NOTED IN PARAGRAPH 4.1 OF THIS REPORT.

1.2.2 ALL STORMWATER DEVICES SHALL BE INSTALLED AND TRIBUTARY AREAS STABILIZED PRIOR RECEIVING STORMWATER.

1.2.3 REFER TO THE MAINE EROSION AND SEDIMENT CONTROL BMP MANUAL FOR ADDITIONAL INFORMATION.

2.0 EROSION AND SEDIMENTATION CONTROL PLAN

2.1 THE EROSION AND SEDIMENTATION CONTROL PLAN IS INCLUDED WITHIN THE PLAN SET.

3.0 DETAILS AND SPECIFICATIONS

3.1 EROSION CONTROL DETAILS AND SPECIFICATIONS ARE INCLUDED IN THE PLAN SET.

4.0 STABILIZATION PLAN FOR WINTER CONSTRUCTION

WINTER CONSTRUCTION CONSISTS OF EARTHWORK DISTURBANCE BETWEEN THE DATES OF NOVEMBER 1 AND APRIL 15. IF A CONSTRUCTION SITE IS NOT STABILIZED WITH PAVEMENT, A ROAD GRAVEL BASE, 75% MATURE VEGETATION COVER OR RIPRAP BY NOVEMBER 15, THEN THE SITE SHALL BE PROTECTED WITH OVER–WINTER STABILIZATION. ANY AREA NOT STABILIZED WITH PAVEMENT, VEGETATION, MULCHING, EROSION CONTROL MIX, EROSION CONTROL MATS, RIPRAP, OR GRAVEL BASE ON A ROAD SHALL BE CONSIDERED OPEN.

THE CONTRACTOR SHALL LIMIT THE WORK AREA TO AREAS THAT WORK WILL OCCUR IN DURING THE SUBSEQUENT 15 DAYS AND SO THAT IT CAN BE MULCHED ONE DAY PRIOR TO A SNOW EVENT. THE CONTRACTOR SHALL STABILIZE WORK AREAS PRIOR TO OPENING ADDITIONAL WORK AREAS TO MINIMIZE AREAS WITHOUT EROSION CONTROL MEASURES.

THE FOLLOWING MEASURES SHALL BE IMPLEMENTED DURING WINTER CONSTRUCTION PERIODS:

4.1 SEDIMENT BARRIERS

DURING FROZEN CONDITIONS, SEDIMENT BARRIERS MAY CONSIST OF EROSION CONTROL MIX BERMS OR ANY OTHER RECOGNIZED SEDIMENT BARRIERS AS FROZEN SOIL PREVENTS THE PROPER INSTALLATION OF HAY BALES OR SILT FENCES.

4.2 MULCHING

ALL AREAS SHALL BE CONSIDERED TO BE DENUDED UNTIL SEEDED AND MULCHED. HAY AND STRAW MULCH SHALL BE APPLIED AT A RATE OF 150 LB. PER 1,000 SQUARE FEET OR 3 TONS/ACRE (TWICE THE NORMAL ACCEPTED RATE OF 75–LBS./1,000 S.F. OR 1.5 TONS/ACRE) AND SHALL BE PROPERLY ANCHORED. EROSION CONTROL MIX MUST BE APPLIED WITH A MINIMUM 4 INCH THICKNESS. MULCH SHALL NOT BE SPREAD ON TOP OF SNOW. THE SNOW SHALL BE REMOVED DOWN TO A ONE–INCH DEPTH OR LESS PRIOR TO APPLICATION. AFTER EACH DAY OF FINAL GRADING, THE AREA SHALL BE PROPERLY STABILIZED WITH ANCHORED HAY OR STRAW OR EROSION CONTROL MATTING. AN AREA SHALL BE CONSIDERED TO HAVE BEEN STABILIZED WHEN EXPOSED SURFACES HAVE BEEN EITHER MULCHED OR ADEQUATELY ANCHORED SO THAT GROUND SURFACE IS NOT VISIBLE THROUGH THE MULCH. BETWEEN THE DATES OF NOVEMBER 1 AND APRIL 15, ALL MULCH SHALL BE ANCHORED BY EITHER MULCH NETTING, TRACKING OR WOOD CELLULOSE FIBER. THE COVER WILL BE CONSIDERED SUFFICIENT WHEN THE GROUND SURFACE IS NOT VISIBLE THROUGH THE MULCH. AFTER NOVEMBER 1ST, MULCH AND ANCHORING OF ALL EXPOSED SOIL SHALL OCCUR AT THE END OF EACH FINAL GRADING WORKDAY.

4.3 SOIL STOCKPILING

STOCKPILES OF SOIL OR SUBSOIL SHALL BE MULCHED FOR OVER WINTER PROTECTION WITH HAY OR STRAW AT TWICE THE NORMAL RATE OR WITH A FOUR–INCH LAYER OF EROSION CONTROL MIX. THIS SHALL BE DONE WITHIN 24 HOURS OF STOCKING AND RE–ESTABLISHED PRIOR TO ANY RAINFALL OR SNOWFALL.

4.4 SEEDING

BETWEEN THE DATES OF OCTOBER 15TH AND APRIL 1ST, LOAM OR SEED SHALL NOT BE REQUIRED. DURING PERIODS OF ABOVE FREEZING TEMPERATURES FINISHED AREAS SHALL BE FINE GRADED AND EITHER PROTECTED WITH MULCH OR TEMPORARILY SEEDED AND MULCHED UNTIL SUCH TIME AS THE FINAL TREATMENT CAN BE APPLIED. IF THE DATE IS AFTER NOVEMBER 1ST AND IF THE EXPOSED AREA HAS NOT BEEN LOAMED, FINAL GRADING WITH A UNIFORM SURFACE, THEN THE AREA MAY BE DORMANT SEEDED AT A RATE OF 3 TIMES HIGHER THAN SPECIFIED FOR PERMANENT SEED AND THEN MULCHED.

DORMANT SEEDING MAY BE PLACED PRIOR TO THE PLACEMENT OF MULCH OR EROSION CONTROL BLANKETS. IF DORMANT SEEDING IS USED FOR THE SITE, ALL DISTURBED AREAS SHALL RECEIVE 4" OF LOAM AND SEED AT AN APPLICATION RATE OF 5 LBS/1,000 S.F. ALL AREAS SEEDED DURING THE WINTER SHALL BE INSPECTED IN THE SPRING FOR ADEQUATE CATCH. ALL AREAS INSUFFICIENTLY VEGETATED (LESS THAN 75% CATCH) SHALL BE REVEGETATED BY REPLACING LOAM, SEED AND MULCH. IF DORMANT SEEDING IS NOT USED FOR THE SITE, ALL DISTURBED AREAS SHALL BE REVEGETATED IN THE SPRING.

4.5 OVER WINTER STABILIZATION OF DISTURBED SOILS

BY SEPTEMBER 15TH, ALL DISTURBED SOILS ON AREAS HAVING A SLOPE LESS THAN 15% SHALL BE SEEDED AND MULCHED. IF THE DISTURBED AREAS ARE NOT STABILIZED BY THIS DATE, THEN ONE OF THE FOLLOWING ACTIONS SHALL BE TAKEN TO STABILIZE THE SOIL FOR LATE FALL AND WINTER:

- STABILIZE THE SOIL WITH TEMPORARY VEGETATION – BY OCTOBER 1ST, SEED THE DISTURBED SOIL WITH WINTER RYE AT A SEEDING RATE OF 3LBS PER 1,000 S.F., LIGHTLY MULCH THE SEEDED SOIL WITH HAY OR STRAW AT 75 LBS PER 1,000 S.F., AND ANCHOR THE MULCH WITH PLASTIC NETTING. MONITOR GROWTH OF THE RYE OVER THE NEXT 30 DAYS. IF THE RYE FAILS TO GROW AT LEAST THREE INCHES OR FAILS TO COVER AT LEAST 75% OF THE DISTURBED SOIL BEFORE NOVEMBER 1ST, THEN MULCH THE AREA FOR OVER–WINTER PROTECTION.
- STABILIZE THE SOIL WITH SOD – STABILIZE THE DISTURBED SOIL WITH PROPERLY INSTALLED SOD BY OCTOBER 1ST. PROPER INSTALLATION INCLUDES PINNING THE SOD ONTO THE SOIL WITH WIRE PINS, ROLLING THE SOD TO GUARANTEE CONTACT BETWEEN THE SOD AND UNDERLYING SOIL, AND WATERING THE SOD TO PROMOTE ROOT GROWTH INTO THE DISTURBED SOIL.
- STABILIZE THE SOIL WITH MULCH – BY NOVEMBER 15TH, MULCH THE DISTURBED SOIL BY SPREADING HAY OR STRAW AT A RATE OF AT LEAST 150 LBS PER 1,000 S.F. ON THE AREA SO THAT NO SOIL IS VISIBLE THROUGH THE MULCH. IMMEDIATELY AFTER APPLYING THE MULCH, ANCHOR THE MULCH WITH PLASTIC NETTING TO PREVENT WIND FROM MOVING THE MULCH OFF THE DISTURBED SOIL.

4.6 OVER WINTER STABILIZATION OF DISTURBED SLOPES

ALL STONE–COVERED SLOPES SHALL BE CONSTRUCTED AND STABILIZED BY NOVEMBER 15TH. ALL SLOPES TO BE VEGETATED SHALL BE SEEDED AND MULCHED BY SEPTEMBER 1ST. A SLOPE IS CONSIDERED A GRADE GREATER THAN 15%. IF A SLOPE TO BE VEGETATED IS NOT STABILIZED BY SEPTEMBER 1ST, THEN ONE OF THE FOLLOWING ACTION SHALL BE TAKEN TO STABILIZE THE SLOPE FOR LATE FALL AND WINTER:

- STABILIZE THE SOIL WITH TEMPORARY VEGETATION AND EROSION CONTROL MATS – BY OCTOBER 1ST THE DISTURBED SLOPE SHALL BE SEEDED WITH WINTER RYE AT A SEEDING RATE OF 3 LBS PER 1,000 S.F. AND THEN INSTALL EROSION CONTROL MATS OR ANCHORED MULCH OVER THE SEEDING. IF THE RYE FAILS TO GROW AT LEAST THREE INCHES OR FAILS TO COVER AT LEAST 75% F THE SLOPE BY NOVEMBER 1ST, THEN THE CONTRACTOR SHALL COVER THE SLOPE WITH A LAYER OF EROSION CONTROL MIX OR WITH STONE RIPRAP.
- STABILIZE THE SOIL WITH SOD – THE DISTURBED SLOPE SHALL BE STABILIZED WITH PROPERLY INSTALLED SOD BY OCTOBER 1ST. PROPER INSTALLATION INCLUDES THE CONTRACTOR PINNING THE SOD ONTO THE SLOPE WITH WIRE PINS, ROLLING THE SOD TO GUARANTEE CONTACT BETWEEN THE SOD AND UNDERLYING SOIL, AND WATERING THE SOD TO PROMOTE ROOT GROWTH INTO THE DISTURBED SOIL. THE CONTRACTOR SHALL NOT USE LATE–SEASON SOD INSTALLATION TO STABILIZE SLOPES HAVING A GRADE GREATER THAN 3H:1V OR HAVING GROUNDWATER SEEPS ON THE SLOPE FACE.
- STABILIZE THE SOIL WITH EROSION CONTROL MIX – EROSION CONTROL MIX SHALL BE PROPERLY INSTALLED BY NOVEMBER 15TH. THE CONTRACTOR SHALL NOT USE EROSION CONTROL MIX TO STABILIZE SLOPES HAVING GRADES GREATER THAN 2H:1V OR HAVING GROUNDWATER SEEPS ON THE SLOPE FACE.
- STABILIZE THE SOIL WITH STONE RIPRAP – PLACE A LAYER OF STONE RIPRAP ON THE SLOPE BY NOVEMBER 15TH. A REGISTERED PROFESSIONAL ENGINEER SHALL BE HIRED TO DETERMINE THE STONE SIZE NEEDED FOR STABILITY ON THE SLOPE AND TO DESIGN A FILTER LAYER FOR UNDERNEATH THE RIPRAP.

5.0 INSPECTION AND MAINTENANCE

A PERSON WITH KNOWLEDGE OF EROSION AND STORMWATER CONTROL, INCLUDING THE STANDARDS AND CONDITIONS IN THE PERMIT, SHALL CONDUCT PERIODIC VISUAL INSPECTIONS OF INSTALLED EROSION CONTROL MEASURES. THE FREQUENCY OF INSPECTION SHALL OCCUR AT LEAST ONCE EVERY TWO WEEKS, AS WELL AS AFTER A "STORM EVENT". A "STORM EVENT" SHALL CONSIST 0.5 INCHES OF RAIN WITHIN A 24 HOUR PERIOD. THE FOLLOWING EROSION AND SEDIMENT CONTROL – BEST MANAGEMENT PRACTICES (BMP'S) SHALL INSPECTED IN THE MANNER AS DESCRIBED.

5.1 SEDIMENT BARRIERS

HAY BALE BARRIERS, SILT FENCES AND FILTER BERMS SHALL BE INSPECTED AND REPAIRED FOR THE FOLLOWING IF THERE ARE ANY SIGNS OF EROSION OR SEDIMENTATION BELOW THEM. IF THERE ARE SIGNS OF UNDERCUTTING AT THE CENTER OR THE EDGES OF THE BARRIER, OR IMPOUNDING OF LARGE VOLUMES OF WATER BEHIND THEM, SEDIMENT BARRIERS SHALL BE REPLACED WITH A TEMPORARY CHECK DAM. SHOULD THE FABRIC ON A SILT FENCE OR FILTER BARRIER DECOMPOSE OR BECOME INEFFECTIVE PRIOR TO THE END OF THE EXPECTED USABLE LIFE AND THE BARRIER IS STILL NECESSARY, THE FABRIC SHALL BE REPLACED PROMPTLY. SEDIMENT DEPOSITS SHOULD BE REMOVED WHEN DEPOSITS REACH APPROXIMATELY ONE–HALF THE HEIGHT OF THE BARRIER. FILTER BERMS SHOULD BE RESHAPED AS NEEDED. ANY SEDIMENT DEPOSITS REMAINING IN PLACE AFTER THE SILT FENCE OR FILTER BARRIER IS NO LONGER REQUIRED SHOULD BE DRESSED TO CONFORM TO THE EXISTING GRADE, PREPARED AND SEEDED.

5.2 STABILIZED STONE CONSTRUCTION ENTRANCES

THE EXIT SHALL BE MAINTAINED IN A CONDITION THAT WILL PREVENT TRACKING OF SEDIMENT ONTO PUBLIC RIGHTS–OF–WAY. WHEN THE CONTROL PAD BECOMES INEFFECTIVE, THE STONE SHALL BE REMOVED ALONG WITH THE COLLECTED SOIL MATERIAL AND REDISTRIBUTED ON SITE IN A STABLE MANNER. THE ENTRANCE SHOULD THEN BE RECONSTRUCTED. THE CONTRACTOR SHALL SWEEP OR WASH PAVEMENT AT EXITS, WHICH HAVE EXPERIENCED MUD–TRACKING ON TO THE PAVEMENT OR TRAVELED WAY. WHEN WASHING IS REQUIRED, IT SHALL BE DONE ON AN AREA STABILIZED WITH AGGREGATE, WHICH DRAINS INTO AN APPROVED SEDIMENT TRAPPING DEVICE. ALL SEDIMENT SHALL BE PREVENTED FROM ENTERING STORM DRAINS, DITCHES, OR WATERWAYS.

5.3 MULCHED AREAS

ALL MULCHES MUST BE INSPECTED PERIODICALLY, IN PARTICULAR AFTER RAINSTORMS, TO CHECK FOR RILL EROSION. IF LESS THAN 90% OF THE SOIL SURFACE IS COVERED BY MULCH, ADDITIONAL MULCH SHALL BE IMMEDIATELY APPLIED. NETS MUST BE INSPECTED AFTER RAIN EVENTS FOR DISLOCATION OR FAILURE. IF WASHOUTS OR BREAKAGE OCCUR, RE–INSTALL THE NETS AS NECESSARY AFTER REPAIRING DAMAGE TO THE SLOPE. WHERE MULCH IS USED IN CONJUNCTION WITH ORNAMENTAL PLANTINGS, INSPECT PERIODICALLY THROUGHOUT THE YEAR TO DETERMINE IF MULCH IS MAINTAINING COVERAGE OF THE SOIL SURFACE. REPAIR AS NEEDED.

5.4 DUST CONTROL

WHEN TEMPORARY DUST CONTROL MEASURES ARE USED, REPETITIVE TREATMENT SHALL BE APPLIED AS NEEDED TO ACCOMPLISH CONTROL.

5.5 STORMWATER APPURTENANCES

ALL UNDERDRAINS, STORM DRAINS, AND CATCH BASINS NEED TO BE OPERATING EFFECTIVELY AND FREE OF DEBRIS.

5.6 EROSION AND SEDIMENTATION CONTROL INSPECTIONS:

ACORN ENGINEERING HAS PERSONNEL QUALIFIED TO CONDUCT EROSION AND SEDIMENTATION CONTROL INSPECTIONS. FOR FURTHER INFORMATION CONTACT:

CONTACT: WILL SAVAGE, PE
TELEPHONE: (207) 775–2655

QUALIFICATIONS:

- MAINE PROFESSIONAL ENGINEERING LICENSE #11419
- MAINE DEP – CERTIFIED IN MAINTENANCE & INSPECTION OF STORMWATER BMP'S CERT #14
- CERTIFIED EROSION, SEDIMENT AND STORM WATER INSPECTOR (CESSWI) CERT #0293
- CERTIFIED PROFESSIONAL IN EROSION AND SEDIMENT CONTROL (CPESC) CERT. #4620

THE CONTRACTOR HAS SOLE RESPONSIBILITY FOR COMPLYING WITH THE EROSION AND SEDIMENTATION REPORT/PLAN, INCLUDING CONTROL OF FUGITIVE DUST. THE CONTRACTOR SHALL BE RESPONSIBLE FOR ANY MONETARY PENALTIES RESULTING FROM FAILURE TO COMPLY WITH THESE STANDARDS.

6.0 IMPLEMENTATION SCHEDULE

THE FOLLOWING IMPLEMENTATION SEQUENCE IS INTENDED TO MAXIMIZE THE EFFECTIVENESS OF THE ABOVE DESCRIBED EROSION CONTROL MEASURES. CONTRACTORS SHOULD AVOID OVEREXPOSING DISTURBED AREAS AND LIMIT THE AMOUNT OF STABILIZATION AREA.

1. INSTALL A STABILIZED CONSTRUCTION ENTRANCE IN ALL LOCATIONS WHERE CONSTRUCTION TRAFFIC WILL ENTER AND EXIT THE SITE.
2. INSTALL PERIMETER SILT FENCE OR EROSION CONTROL BERM.
3. INSTALL ALL OTHER EROSION CONTROL DEVICES AS NECESSARY THROUGHOUT THE REMAINDER OF THIS SCHEDULE.
4. COMMENCE INSTALLATION OF DRAINAGE INFRASTRUCTURE.
5. CONTAIN RUNOFF WITHIN THE SITE WHILE PROVIDING AN ENGINEERED OUTLET WITH SILTATION BARRIER TO THE MUNICIPAL SEWER AND STORM SYSTEMS WITHIN PARK AVENUE AND MARSTON STREET.
6. COMMENCE EARTHWORK OPERATIONS, WALL AND FOUNDATION INSTALLATION.
7. COMMENCE INSTALLATION OF UTILITIES.
8. CONTINUE EARTHWORK AND GRADING TO SUBGRADE AS NECESSARY FOR CONSTRUCTION.
9. COMPLETE INSTALLATION OF DRAINAGE INFRASTRUCTURE, AS WELL AS OTHER UTILITY WORK.
10. COMPLETE REMAINING EARTHWORK OPERATIONS.
11. INSTALL SUB–BASE AND BASE GRAVELS IN PAVED AREAS.
12. INSTALL PAVING, CURBING AND BRICKWORK.
13. LOAM, LIME, FERTILIZE, SEED AND MULCH DISTURBED AREAS AND COMPLETE ALL LANDSCAPING.
14. ONCE THE SITE IS STABILIZED, 90% CATCH OF GRASS HAS BEEN OBTAINED, OR MULCHING OF LANDSCAPE AREAS IS COMPLETE REMOVE ALL TEMPORARY EROSION CONTROL MEASURES.
15. TOUCH UP AREAS WITHOUT A VIGOROUS CATCH OF GRASS WITH LOAM AND SEED.
16. COMPLETE SITE SIGNAGE AND STRIPING.
17. EXECUTE PROPER MAINTENANCE OF ALL TEMPORARY AND PERMANENT EROSION CONTROL MEASURES THROUGHOUT THE PROJECT.

THE ABOVE IMPLEMENTATION SEQUENCE SHOULD BE GENERALLY FOLLOWED BY THE SITE CONTRACTOR. HOWEVER, THE CONTRACTOR MAY CONSTRUCT SEVERAL ITEMS SIMULTANEOUSLY. THE CONTRACTOR SHALL SUBMIT TO THE OWNER A SCHEDULE OF THE COMPLETION OF THE WORK. IF THE CONTRACTOR IS TO COMMENCE THE CONSTRUCTION OF MORE THAN ONE ITEM ABOVE, THEY SHALL LIMIT THE AMOUNT OF EXPOSED AREAS TO THOSE AREAS IN WHICH WORK IS EXPECTED TO BE UNDERTAKEN DURING THE FOLLOWING 30 DAYS.

THE CONTRACTOR SHALL RE–VEGETATE DISTURBED AREAS AS RAPIDLY AS POSSIBLE. ALL AREAS SHALL BE PERMANENTLY STABILIZED WITHIN 7 DAYS OF FINAL GRADING OR BEFORE A STORM EVENT. THE CONTRACTOR SHALL INCORPORATE PLANNED INLETS AND DRAINAGE SYSTEMS AS EARLY AS POSSIBLE INTO THE CONSTRUCTION PHASE.

7.0 CONCLUSION

THE ABOVE EROSION CONTROL NARRATIVE IS INTENDED TO MINIMIZE THE DEVELOPMENT IMPACT BY IMPLEMENTING TEMPORARY AND PERMANENT EROSION CONTROL MEASURES. THE CONTRACTOR SHALL ALSO REFER TO THE MAINE EROSION AND SEDIMENT CONTROL BMP MANUAL FOR ADDITIONAL INFORMATION.

TEMPORARY SEEDING PLAN

SITE PREPARATION

THE SEEDED AREAS SHALL BE FEASIBLY GRADED OUT TO PROVIDE THE USE OF EQUIPMENT FOR SEEDBED PREPARATION, SEEDING, MULCH APPLICATION, AND MULCH ANCHORING. IF NECESSARY, THE SITE MAY REQUIRE ADDITIONAL TEMPORARY EROSION CONTROL MEASURES OUTLINED IN THE EROSION CONTROL REPORT.

SEEDBED PREPARATION

FERTILIZER SHALL BE APPLIED TO THE SITE AT A RATE OF 13.8 POUNDS PER 1,000 SQUARE FEET. THE COMPOSITION OF THE FERTILIZER SHALL BE 10–10–10 (N–P205–K20) OR EQUIVALENT.

LIMESTONE SHALL BE APPLIED TO THE SITE AT A RATE OF 138 POUNDS PER 1,000 SQUARE FEET.

SEEDING

THE COMPOSITION AND AMOUNT OF TEMPORARY SEED APPLIED TO A SITE SHALL BE DETERMINED BY THE FOLLOWING TABLE:

TEMPORARY SEED APPLICATION RATES

SEED	LBS / ACRE	RECOMMENDED SEEDING DATES
WINTER RYE	2.57	8/15 TO 10/1
OATS	1.84	4/1 TO 7/1 8/15 TO 9/15
ANNUAL RYGRASS	0.92	4/1 TO 7/1
SUDANGRASS	0.92	5/15 TO 8/15
PERENNIAL	0.92	8/15 TO 9/15
TOTAL	7.17 LBS/ACRE	

MULCHING

MULCH SHALL BE APPLIED AT A RATE OF 70 LBS – 90 LBS PER 1,000 SQUARE FEET. THE MULCH SHALL BE INSTALLED AT A MINIMUM DEPTH OF 4 INCHES. THE SEEDED AREA SHALL BE MULCHED IMMEDIATELY AFTER SEED IS APPLIED. MULCHING DURING THE WINTER SEASON SHALL BE DOUBLE THE NORMAL AMOUNT.

CONCLUSION

PLEASE REFER TO THE MAINE EROSION AND SEDIMENT CONTROL BMP MANUAL FOR ADDITIONAL INFORMATION PERTAINING TO TEMPORARY SEEDING AND MULCHING.

PRELIMINARY
NOT ISSUED FOR
CONSTRUCTION

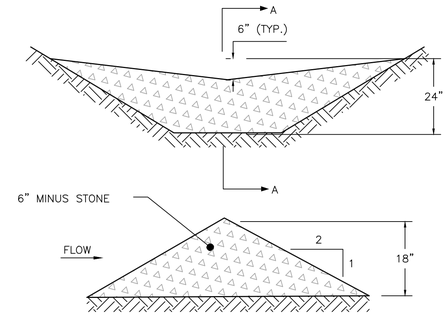

SECTION A–A

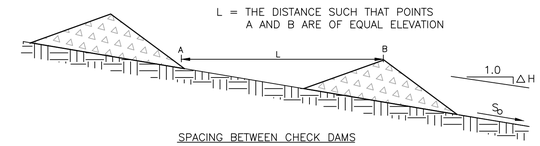

SPACING BETWEEN CHECK DAMS

So (FT./FT.)	L (FT.)
0.020	75
0.030	50
0.040	40
0.050	30
0.080	20
0.100	10

STONE CHECK DAM

NOT TO SCALE

NOTES:

1. CONTRACTOR SHALL ADD STONE TO ENTRANCE AS MUD/SILT MATERIAL ACCUMULATES
2. STONE SHALL BE 2"–3" COARSE AGGREGATE
3. CONSTRUCTION ENTRANCE SHALL BE GRADED TO NOT ALLOW ANY STORMWATER TO BE CONVEYED OFF SITE. IN SITUATIONS WHERE THIS IS NOT POSSIBLE, ANY STORMWATER CONVEYED OFFSITE SHALL BE TREATED OR RETAINED IN A MANNER APPROVED BY ENGINEER.
4. WHEN NECESSARY, ON–SITE VEHICLES SHALL HAVE THEIR WHEELS CLEANED PRIOR TO LEAVING SITE.
5. CONSTRUCTION ENTRANCE SHALL BE GRADED IN A MANNER THAT PREVENTS TRACKING OF SEDIMENTS ONTO PUBLIC RIGHT–OF–WAY

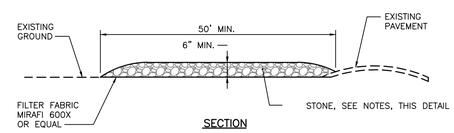

SECTION

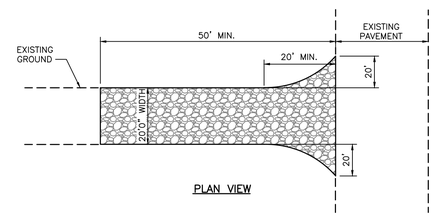

PLAN VIEW

STABILIZED CONSTRUCTION ENTRANCE

NOT TO SCALE

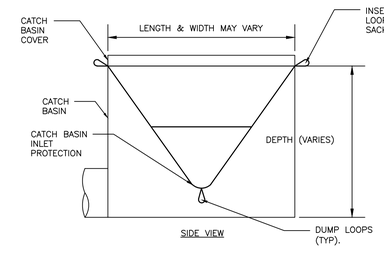

NOTES:

1. CATCH BASIN INLET PROTECTION SHALL BE INSTALLED DOWNGRADIENT OF PROPOSED PROJECT AND ROUTINELY MAINTAINED IN ACCORDANCE WITH MANUFACTURER'S RECOMMENDATIONS
2. CATCH BASIN SIZE VARIES. CONTRACTOR TO ENSURE CATCH BASIN INLET PROTECTION MATCHES CATCH BASIN DIMENSIONS.
3. SILT SACK SHALL BE ACF ENVIRONMENTAL SILT SACK, TYPE A, OR APPROVED EQUAL.

CATCH BASIN INLET PROTECTION

NOT TO SCALE

ISSUED FOR	BY	DATE
FINAL APP.	MTA	1/13/17

DRAWING NAME: EROSION & SEDIMENTATION CONTROL DETAILS

PROJECT NAME: HOTEL RENOVATION & STORMWATER UPGRADES

CLIENT: LA QUINTA INN & SUITES
909 HIDDEN RIDGE SUITE 600, IRVING, TEXAS 75038

ACORN ENGINEERING, INC.

THIS PLAN SHALL NOT BE MODIFIED WITHOUT WRITTEN PERMISSION FROM ACORN ENGINEERING, INC. ANY MODIFICATION, WHETHER OR OTHERWISE, SHALL BE AT THE USER'S SOLE RISK AND WITHOUT LIABILITY TO ACORN ENGINEERING, INC.

ACORN ENGINEERING, INC.
158 DANFORTH STREET, PORTLAND, MAINE 04102
(207) 775–2655

FILE:	5012_CIVIL
JN:	5012
SCALE:	NTS
DESIGNED B