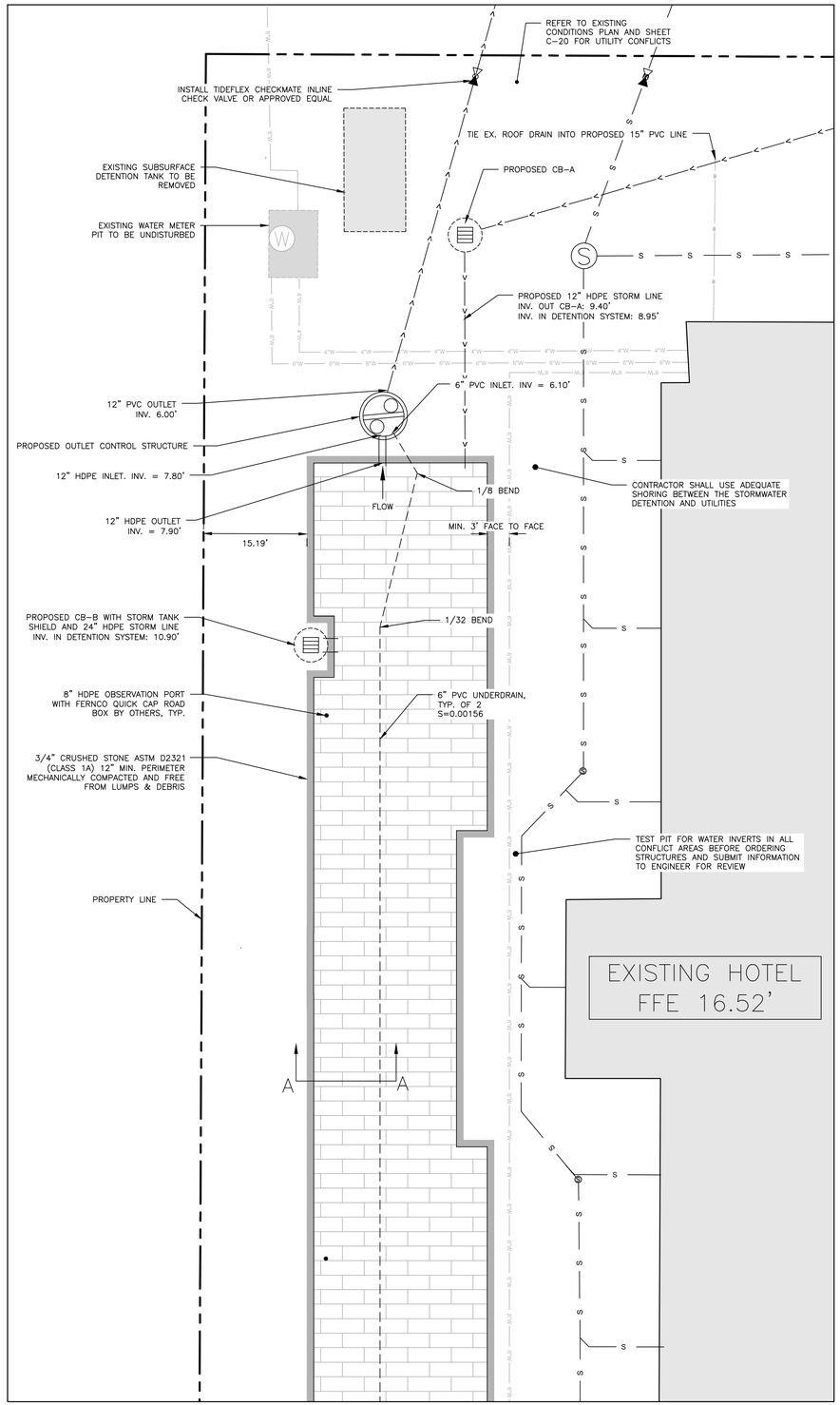

PLAN VIEW
1" = 10'

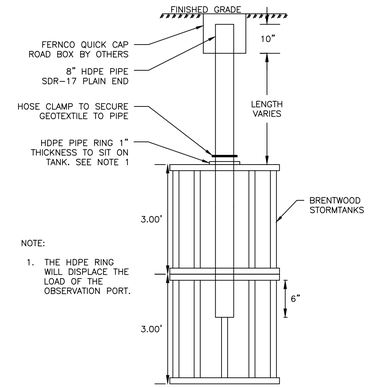

NOTE:

1. THE HDPE RING WILL DISPLACE THE LOAD OF THE OBSERVATION PORT.

OBSERVATION PORT PROFILE
NOT TO SCALE

MANUFACTURER'S NOTES:

1. ALL DESIGN SPECIFICATIONS FOR CHAMBERS SHALL MEET THE DESIGN REQUIREMENTS AND LOAD FACTORS SPECIFIED IN SECTION 12.12 OF THE LATEST EDITION OF THE AASHTO LRFD BRIDGE DESIGN SPECIFICATIONS

ENGINEER'S NOTES:

1. THE LAYOUT AND DIMENSION OF THE SUBSURFACE DETENTION MAY BE MODIFIED WITH AN ENGINEER APPROVED EQUAL WHICH PROVIDES EQUAL DETENTION STORAGE AND WATER QUALITY TREATMENT.
2. THE SUBSURFACE DETENTION SHALL BE INSPECTED BY THE DESIGN ENGINEER, AT A MINIMUM, AT THE FOLLOWING INTERVALS:
   - AFTER PRELIMINARY CONSTRUCTION OF THE SUBSURFACE DETENTION GRADES
   - ONE SITE VISIT DURING THE INSTALLATION OF THE GEOTEXTILE
   - ONE SITE VISIT AFTER THE UNDERDRAINS ARE INSTALLED BUT BEFORE THEY ARE BACKFILLED
   - BEFORE BACKFILLING THE STORM TANK UNITS

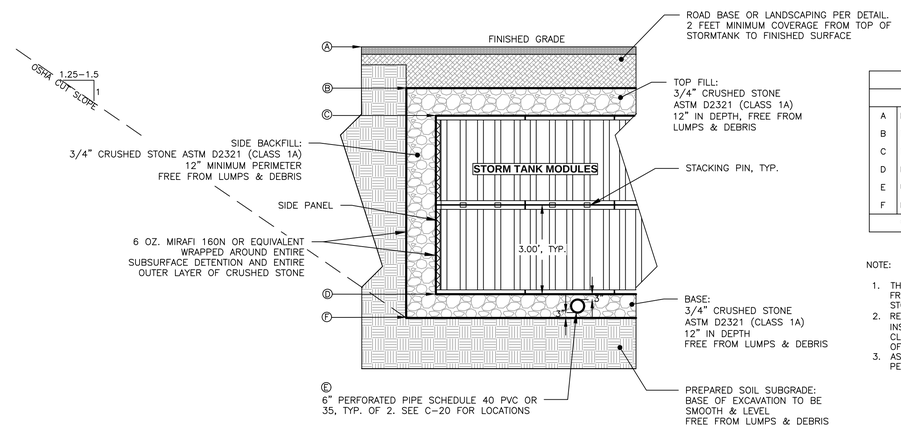

VARITECH STORM TANK SECTION A-A
NOT TO SCALE

SCHEDULE		
ITEM		ELEVATION
A	FINISHED GRADE	16.15'*
B	TOP OF CRUSHED STONE	14.35'
C	TOP OF CHAMBERS	13.35'
D	BOTTOM OF CHAMBERS	7.35'
E	UNDERDRAIN INVERT	6.25'*
F	BOTTOM OF SYSTEM	6.00'*
* VARIES WITH SECTION LOCATION		

NOTE:

1. THE MANUFACTURER'S MAXIMUM ALLOWABLE DEPTH FROM FINISHED GRADE TO THE BOTTOM OF THE STORM TANK IS 11 FEET.
2. REFER TO MANUFACTURER'S DRAWING FOR PIPE INSTALLATION INTO CRATES. MAINTAIN MINIMUM 3" CLEARANCE BETWEEN OUTSIDE OF PIPES AND EDGE OF CRATES.
3. AS FINISHED GRADE CHANGES, THE GRAVEL BASE PER PARKING LOT DETAIL SHALL VARY IN DEPTH.

DESIGN NOTES:

1. ALL CONCRETE TO HAVE A MIN. OF 4,000 PSI COMPRESSIVE STRENGTH AT 28 DAYS.
2. DESIGN LOAD FOR H-20 WHEEL LOAD.
3. CATCH BASIN TO CONFORM TO ASTM-C478 SPECIFICATIONS.
4. REINFORCE TO 0.12 IN SQ./LF.
5. JOINTS SEALED WITH BUTYL RUBBER.
6. POLYPROPYLENE STEPS 12" O.C.

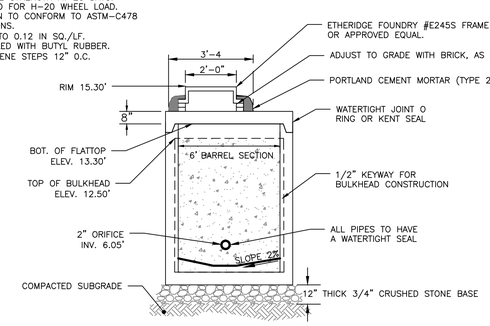

SIDE PROFILE

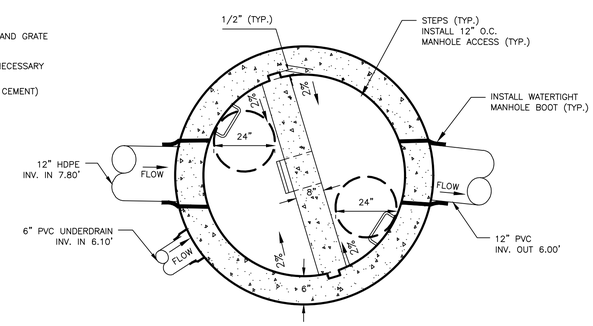

PLAN VIEW

OUTLET CONTROL STRUCTURE
NOT TO SCALE

PRELIMINARY
NOT ISSUED FOR CONSTRUCTION

ISSUED FOR	BY DATE
FINAL APP.	MTA 1/13/17
CITY COMMENTS	MTA 3/14/17

DRAWING NAME: SUBSURFACE DETENTION DETAILS

PROJECT NAME: HOTEL RENOVATION & STORMWATER UPGRADES

CLIENT: LQ MANAGEMENT, LLC
909 HIDDEN RIDGE SUITE 600, IRVING, TEXAS 75038

ACORN ENGINEERING, INC.

THIS PLAN SHALL NOT BE MODIFIED WITHOUT WRITTEN PERMISSION FROM ACORN ENGINEERING, INC. ANY MODIFICATIONS MADE WITHOUT PERMISSION OR OTHERWISE, SHALL BE AT THE USER'S SOLE RISK AND WITHOUT LIABILITY TO ACORN ENGINEERING, INC.

ACORN ENGINEERING, INC.
158 DANFORTH STREET PORTLAND, MAINE 04102
(207) 775-2655

FILE:	5012_CIVIL
JN:	5012
SCALE:	NTS
DESIGNED BY:	SJL
DRAWN BY:	SJL
CHECKED BY:	MTA

STATE OF MAINE MARK T. ADAMS No. 6357 3/14/17 LICENSED PROFESSIONAL ENGINEER

DRAWING NO.
C-45