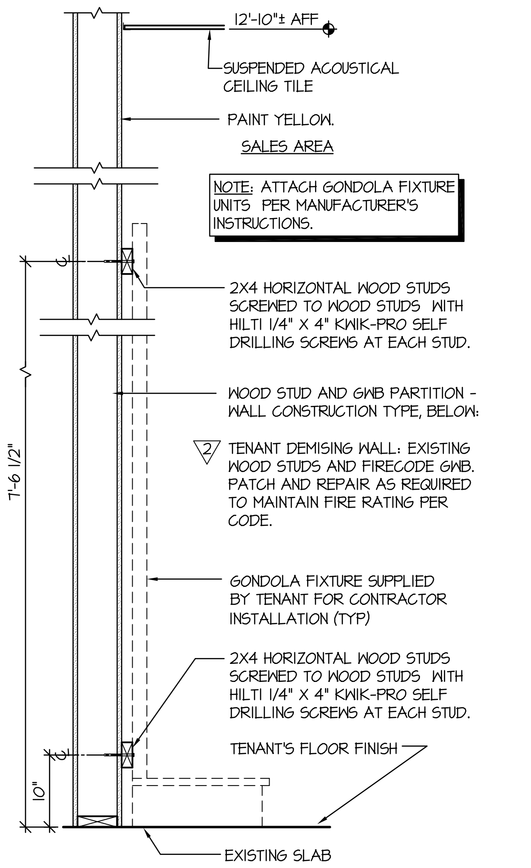

WALL SECTION - CONSTRUCTION TYPE: 2

SCALE: 1" = 1'-0" H:\2004\04147\18\04138\A_H602.dwg (1 / A4)

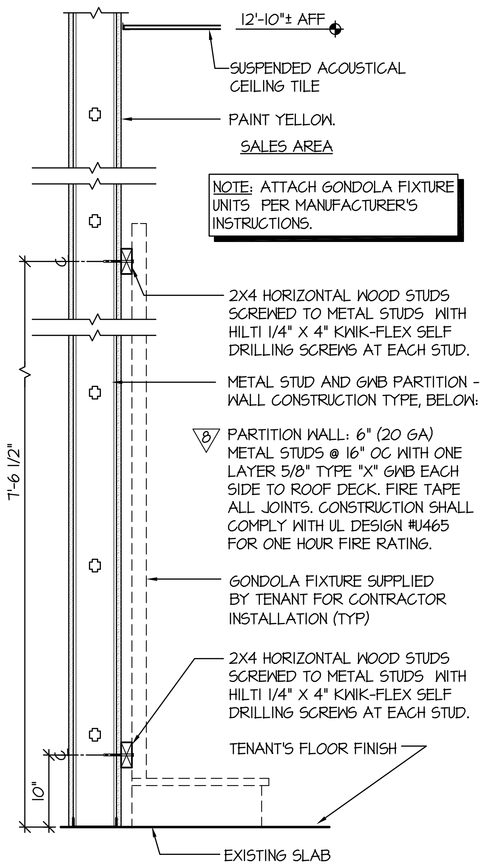

WALL SECTION - CONSTRUCTION TYPE: 8

SCALE: 1" = 1'-0" H:\2004\04147\18\04138\A_H602.dwg (2 / A4)

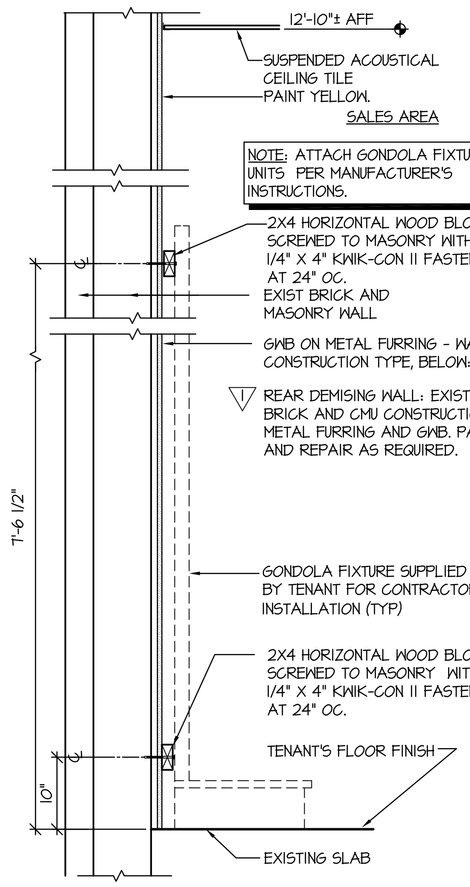

WALL SECTION - CONSTRUCTION TYPE: 1

SCALE: 1" = 1'-0" H:\2004\04147\18\04138\A_H602.dwg (3 / A4)

FINISH SCHEDULE

SPACES	FLOORS	BASES	WALLS	CEILING	NOTES
SALES	CARPET TILE	4" VINYL	GWB-PAINT YELLOW / CMU-PAINT YELLOW	ACT/ EXIST ACT	1,2,3,4,5,6,9
STOCKROOM	CONCRETE	----	EXISTING	-----	8,11
OFFICE	CARPET TILE	4" VINYL	GWB-PAINT WHITE	EXIST ACT	1,2,3,4,5,6,9,10
TOILET	VCT - BEIGE	4" VINYL	GWB-PAINT WHITE	GWB	2,3,5,6,7
VESTIBULE	VCT - BEIGE	4" VINYL	GWB-PAINT WHITE	ACT	2,3,4,6

FINISH NOTES

1. CARPET TILE: MANUFACTURED BY INTERFACE FLOORING SYSTEMS & SUPPLIED BY TENANT. INSTALL PER TENANT'S CRITERIA.
   FIELD TILE: JUNGLE GREEN #3040
   ENTRY TILE: DECO RIB, STYLE #6786049900.
   TENANT'S CONTRACTOR SHALL PREPARE FLOOR SURFACE AND COORDINATE CARPET INSTALLATION W/ CARPET INSTALLER.
2. VINYL COVE BASE: COLOR - BLACK. (VINYL BASE ONLY ON EXPOSED WALLS NOT COVERED BY GONDOLAS IN SALES AREA.)
3. VINYL COMPOSITION TILE (VCT): 1/8" THICK, 12"X12".
   "BEIGE" #51804 "DESERT BEIGE" - STANDARD EXCELON MANUFACTURED BY ARMSTRONG OR EQ.
   CLEAN ANY EXIST VCT SPECIFIED TO REMAIN.
4. REPLACE MISSING AND/OR DAMAGED ACT. REPLACEMENT OF THE 2'-0"X4'-0" TILES SHALL MATCH EXISTING. THE GRID SHALL BE PAINTED WHITE. CLEAN ENTIRE CEILING W/ A CLEANSING SPRAY TO PROVIDE A UNIFORM WHITE SURFACE. PROVIDE A NEW ACT TO MATCH EXISTING.
5. SLATWALL: 3/4" SLATWALL WITH WHITE MELAMINE FINISH. SEE MANUFACTURER'S DRAWINGS FOR INSTALLATION DETAILS.
6. PAINT COLORS ARE AS FOLLOWS:
   WHITE - SHERWIN WILLIAMS PRO 200 LATEX SEMI-GLOSS WHITE W/ B-1 PER GALLON.
   YELLOW - "LEMON SORBET" #2019-60 BENJAMIN MOORE (SATIN FINISH)
   EXPOSED CMU WALLS IN THE SALES AREA SHALL HAVE ONE COAT OF PRIMER AND A MINIMUM OF ONE COAT OF YELLOW PAINT.
7. PAINT TOILET ROOM INTERIOR AND EXTERIOR WALLS WHITE.
8. EXIST CONCRETE FLOOR TO REMAIN. PATCH AND REPAIR AS REQUIRED TO PROVIDE SMOOTH SURFACE.
9. SLATWALL SHALL BE PROVIDED BY TENANT AND INSTALLED BY TENANT'S CONTRACTOR. ALL OTHER FINISHES SHALL BE PROVIDED AND INSTALLED BY TENANT'S CONTRACTOR.
10. PROVIDE PREFORMED COUNTER WITH WHITE HIGH PRESSURE LAMINATE FINISH. MOUNT TO WALLS. FILING CABINETS PROVIDED BY TENANT. SEE ENLARGED OFFICE PLAN AND OFFICE ELEVATION.
11. F R P (FIBERGLASS REINFORCED PANEL) WAINSCOT: FROM 4" TO 8'-0" AFF. COLOR "WHITE" (BEHIND SERVICE SINK ONLY.)

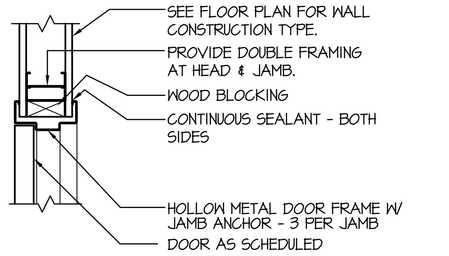

HEAD / JAMB DETAIL

SCALE: 1 1/2" = 1'-0" H:\2004\04147\18\04138\A_DT02.dwg (6 / A4)

DOOR SCHEDULE

DOORS								DETAILS			FR	HDW NOTES	DOOR NOTES
#	W	H	T	MATERIAL				HEAD	JAMB	SILL			
100	3'-0"	6'-8"	1 3/4"	SOLID CORE WD				6/A4	6/A4	-		100	5
200	FR 3'-0"	6'-8"	1 3/4"	HOLLOW METAL				6/A4	6/A4	-	1 HR	200	2,5,7,8,10
300	3'-0"	6'-8"	1 3/4"	SOLID CORE WD				6/A4	6/A4	-		300	5,6
301	3'-0"	6'-8"	1 3/4"	HOLLOW METAL				6/A4	6/A4	-	1 HR	600	5,11
400	FR 4'-0"	7'-0"	1 3/4"	EXIST HOL METAL				-	-	-		400	3,4,5
401	3'-0"	7'-0"	1 3/4"	EXIST HOL METAL				-	-	-		401	3,5,9
500	FR 3'-0"	7'-0"	1 3/4"	EXIST STOREFRONT				-	-	-		500	1,3

DOOR NOTES

1. PROVIDE A SIGN POSTED ON THE EGRESS SIDE, ON OR ADJACENT TO THE DOOR STATING: " THIS DOOR TO REMAIN UNLOCKED WHEN BUILDING IS OCCUPIED." THE SIGN SHALL BE IN LETTERS 1" HIGH ON A CONTRASTING BACKGROUND.
2. DOOR SUPPLIED WITH A BRUSHED ALUMINUM COVER PLATE ON ENTIRE SALES AREA SIDE OF THE DOOR.
3. DOOR, FRAME AND HINGES ARE EXISTING. PROVIDE AND INSTALL ANY MISSING ITEMS OF HARDWARE PER HARDWARE NOTES.
4. PROVIDE (ONE) PEEP HOLE TO VIEW OUT. MOUNT @ 5'-0" AFF.
5. PAINT DOOR AND FRAME W/ WHITE SEMI-GLOSS ENAMEL PAINT.
6. INSTALL TENANT SUPPLIED SIGNAGE PER DETAIL A/A4.
7. REINFORCE JAMBS WITH WOOD BLOCKING.
8. PROVIDE "C" LABEL DOOR AND FRAME PER UNDERWRITER'S LABORATORIES INC.
9. PROVIDE SIGNAGE THAT READS " EMERGENCY EXIT ONLY."
10. PROVIDE SIGNAGE THAT READS " EMPLOYEES ONLY."
11. PROVIDE SIGNAGE THAT READS " ELECTRICAL ROOM."

HARDWARE NOTES

HDW # 100
- 1 1/2 PAIR HINGES: STANDARD WEIGHT
- 1 MORTISE LOCK: SARGENT 8250 LNJ U526D FINISH
- 1 CLOSER: SARGENT 1431 RUOTBEN
- 1 FLOOR STOP: ROCKWOOD 440 U526D FINISH

HDW # 200
- 3 PAIR HINGES: 4 1/2" HEAVY WEIGHT, BALL BEARING PINS
- 2 CLOSERS: SARGENT 1431 RUO
- 1 COORDINATOR : ROCKWOOD 1700
- 1 PUSH - PULL LATCH SET: SARGENT 24-1115 26D FINISH
- 1 SET AUTOMATIC FLUSH BOLTS : ROCKWOOD 1842 U526D FINISH (ON INACTIVE LEAF)
- 1 DUSTPROOF STRIKE : ROCKWOOD 570
- 1 STEEL ASTRAGAL
- 1 THRESHOLD : NATIONAL GUARD 513AL72" (1/4" MAXIMUM HEIGHT)

HDW # 300
- 1 1/2 PAIR HINGES: STANDARD WEIGHT
- 1 STOREROOM LOCKSET: SARGENT 24-28-65G04KL-U526D FINISH. (KEY SEPARATELY AND PROVIDE 2 KEYS FOR EACH LOCK.)
- 1 CLOSER: SARGENT 1431 RUOTBEN (FLOOR/WALL STOP IF SHIPPED WITH HARDWARE)

HDW # 301
- 3 PAIR HINGES: HEAVY WEIGHT
- 1 STOREROOM LOCKSET: SARGENT 24-28-65G04KL-U526D FINISH. (KEY SEPARATELY AND PROVIDE 2 KEYS FOR EACH LOCK.)
- 2 FLUSH BOLTS : ROCKWOOD 555 U526D FIN
- 1 DUST PROOF STRIKE: ROCKWOOD 570
- 1 PEEP HOLE
- 1 ALUM THRESHOLD : NATIONAL GUARD 425AL96" (1/2" MAX HEIGHT)
- 2 SWEEPS : NATIONAL GUARD 9TV48"
- 1 WEATHER STRIP : NATIONAL GUARD 1559684
- 1 RAIN DRIP : NATIONAL GUARD 16A 104"

HDW # 400
- 3 PAIR HINGES: 4 1/2" HEAVY WEIGHT, NON-REMOVABLE PINS
- 1 PANIC DEVICE: WITH KABA CYLINDER (SUPPLIED SEPARATELY BY TENANT)
- 1 PULL HANDLE: ROCKWOOD 102 X 70C U532D FINISH (ON STOCKROOM SIDE OF ACTIVE LEAF)
- 2 OVERHEAD HOLDERS/STOPS : SARGENT EN548H
- 2 FLUSH BOLTS : ROCKWOOD 555 U526D FIN
- 1 DUST PROOF STRIKE: ROCKWOOD 570
- 1 PEEP HOLE
- 1 ALUM THRESHOLD : NATIONAL GUARD 425AL96" (1/2" MAX HEIGHT)
- 2 SWEEPS : NATIONAL GUARD 9TV48"
- 1 WEATHER STRIP : NATIONAL GUARD 1559684
- 1 RAIN DRIP : NATIONAL GUARD 16A 104"

HDW # 401
- 1 1/2 PAIR HINGES: STANDARD WEIGHT, NON-REMOVABLE PINS
- 1 PANIC DEVICE: WITH KABA CYLINDER (SUPPLIED SEPARATELY BY TENANT)
- 1 PULL HANDLE: ROCKWOOD 102 X 70C U532D FINISH (ON STOCKROOM SIDE OF ACTIVE LEAF)
- 1 CLOSER : SARGENT 1430CPSTBEN WITH STOP ARM
- 1 PEEP HOLE
- 1 ALUM THRESHOLD : NATIONAL GUARD 425AL36" (1/2" MAX HEIGHT)
- 1 SWEEP : NATIONAL GUARD 9TV36"
- 1 WEATHER STRIP : NATIONAL GUARD 1553684
- 1 RAIN DRIP : NATIONAL GUARD 16A 40"

HDW # 500
- HINGES PER STOREFRONT MANUFACTURER (BY GENERAL CONTRACTOR)
- 2 CLOSERS : SARGENT 1430 CPS WITH DROP PLATE
- 2 PUSH PLATES (BY GENERAL CONTRACTOR)
- 2 PULL HANDLES (BY GENERAL CONTRACTOR)
- 1 KABA CYLINDER (SUPPLIED BY TENANT)
- 1 DEADLOCK W/ THUMB TURN ON SALES SIDE (BY GENERAL CONTRACTOR)

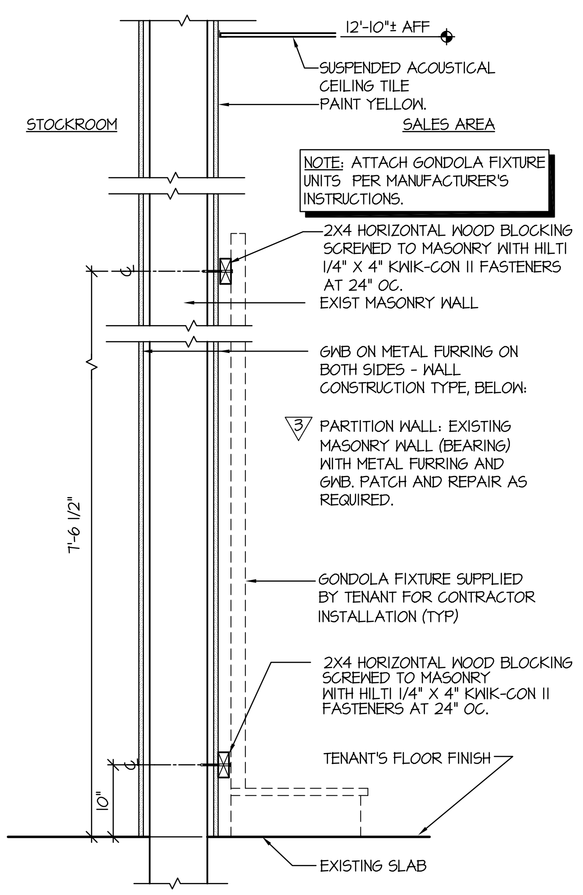

WALL SECTION - CONSTRUCTION TYPE: 3

SCALE: 1" = 1'-0" H:\2004\04147\18\04138\A_H603.dwg (4 / A4)

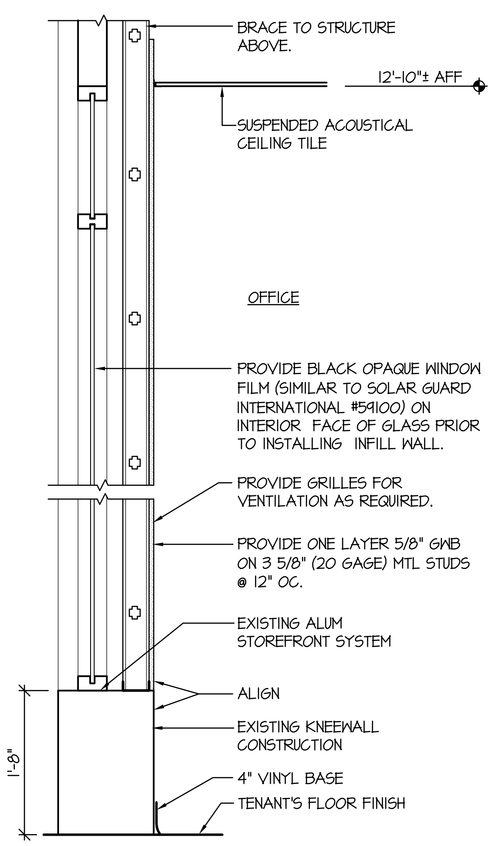

SECTION

SCALE: 1" = 1'-0" H:\2004\04147\18\04138\A_H604.dwg (5 / A4)

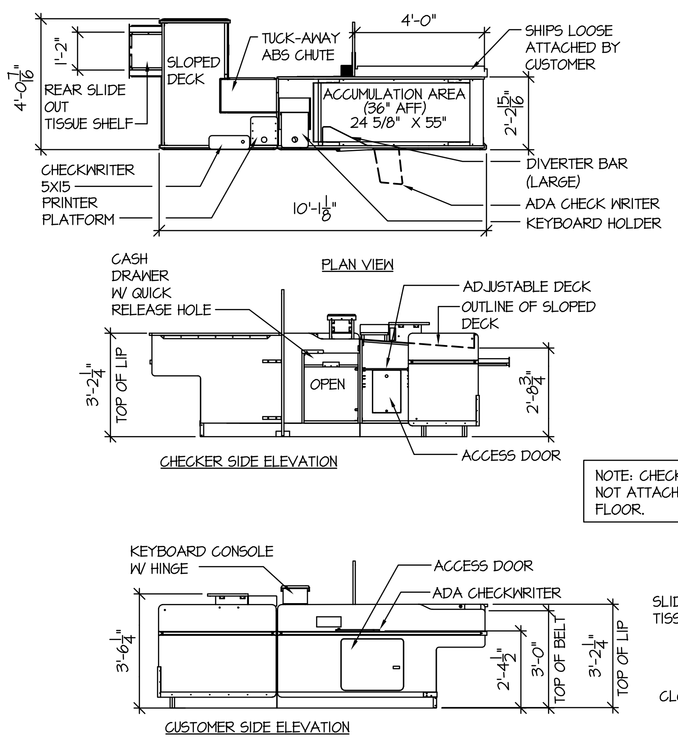

TYPICAL CHECKOUT

SCALE: NOT TO SCALE H:\2004\04147\18\04138\A_DT01.dwg

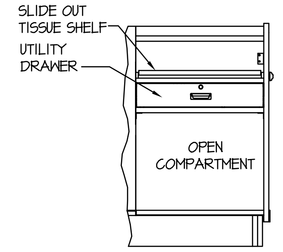

PARTIAL INTERIOR ELEVATION (REAR MODULE)

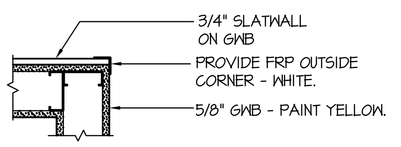

DETAIL

SCALE: 1 1/2" = 1'-0" H:\2004\04147\18\04138\A_DT04.dwg (7 / A4)

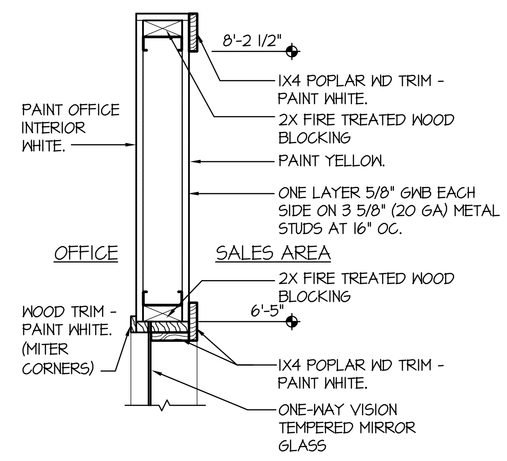

HEAD / JAMB DETAIL

SCALE: 1 1/2" - 1'-0" H:\2004\04147\18\04138\A_DT03.dwg (8 / A4)

6" X 9" PLAQUE W/ 4" HANDICAPPED PICTOGRAM, 3/4" COPY, GRADE II BRAILLE. MOUNT ON WALL @ 60" OC AFF 8" MAX FROM THE STRIKE SIDE DOOR JAMB.

SIGNAGE ELEVATION

SCALE: NTS H:\2004\04147\18\04138\A_DT06.dwg (A / A4)

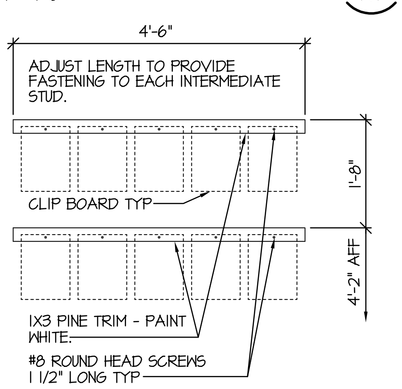

CLIPBOARD RACK ELEVATION

SCALE: 3/4" = 1'-0" H:\2004\04147\18\04138\A_DT07.dwg (B / A4)

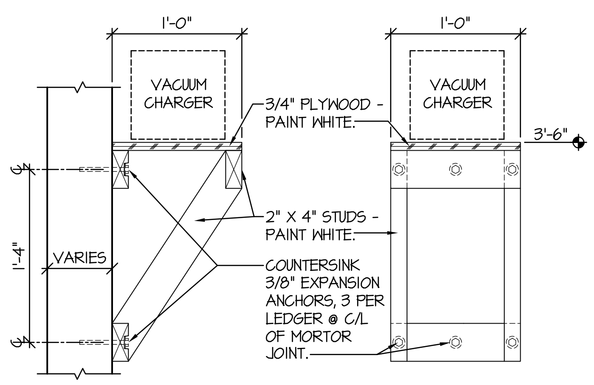

SHELF DETAIL AND ELEVATION

SCALE: 1 1/2" = 1'-0" H:\2004\04147\18\04138\A_DT05.dwg (C / A4)

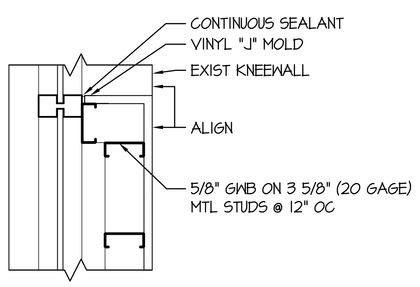

DETAIL

SCALE: 1 1/2" = 1'-0" H:\2004\04147\18\04138\A_DT06.dwg (9 / A4)

mark	date	by	description

revisions

date	4/23/04
project	04147.18
designed	MAV
drawn	MAV
checked	KLR

Cederquist Rodriguez Ripley PC
129 W Virginia Beach Blvd.
Norfolk, VA 23510
PH (757) 622-2228
FAX (757) 622-8883

project: DOLLAR TREE
UNION STATION PLAZA DEAL #3813
PORTLAND, MAINE
drawing: DETAILS, ELEVATIONS, AND SCHEDULES

sheet 5

A4

of 13

H:\2004\04147\18\04138\A_D04.dwg