NAPCO | COMMERCIAL
FIREWOLF

Reviewed for Code Compliance
Inspections Division
Approved with Conditions
Date: 02/06/17

Addressable Manual Fire Pull Station

FWC-FSLC-PULL, FWC-FSLC-PULLK, FWC-FSLC-PULL2K, FWC-FSLC-PULL2

FEATURES:

- Addressable integrated design
- All metal construction
- Single- and dual-action models available
- Extremely easy to operate
- Bi-colored status LED indicates Standby and Alarm conditions
- Address is programmable in the EEPROM
- Address can be programmed when installed
- Key lock or hex key lock models available
- Terminals accept up to 14AWG wire
- ADA compliant (except D models)

DESCRIPTION:

The FWC-FSLC-PULL series are the Napco series of addressable manual pull stations that provide a fast and practical means of manually initiating a fire alarm signal. Both single-action and dual-action manual pull stations are available. Resetting of the pull station requires either a Cat 30 key or a 1/8" hex key (depending upon the model used).

An alarm condition is actuated by pulling down on the handle of the FWC-FSLC-PULL and FWC-FSLC-PULLK single action models. On the dual-action models FWC-FSLC-PULL2 and FWC-FSLC-PULL2K, the Lift and Pull cover must be lifted before pulling down on the pull station handle. Once the pull station is activated, the handle cannot be put back into a normal standby condition without using the key operated reset feature.

The FWC-FSLC-PULL series is electronically addressable and includes a bi-colored status LED. The LED blinks green indicating normal communication with the DCP compatible SLC loop. When an alarm condition is actuated by pulling the handle, the LED will latch red to indicate the alarm condition.

LISTINGS:

- UL38: Manual Signaling Boxes for Fire Alarm Systems
- NFPA 72 National Fire Alarm Code
- CSFM: California State Fire Marshall
- NYCFD: NYC Fire Department

APPLICATION:

Manual pull stations shall be Napco addressable PULL-series single or dual action models, FWC-FSLC-PULL, FWC-FSLC-PULLK, FWC-FSLC-PULL2, or FWC-FSLC-PULL2K. Models shall be made of 14 AWG CRS and painted with red enamel.

The words Fire Alarm shall be in a contrasting color and be embossed text 1/2" tall. The electronics shall be fully integrated into the manual pull station requiring only connection to the SLC loop of the control panel. Programming of the manual pull station address must be possible with the manual pull station fully installed.

Manual pull stations shall be Underwriters Laboratories Inc. Listed, CSFM Approved, and be installed within the limits defined in the Americans With Disabilities Act.

Reviewed for Code Compliance
Inspections Division
Approved with Conditions
Date: 02/06/17

SPECIFICATIONS	
SLC Applied Voltage	Rated Range 25.3 - 39VDC
SLC Current Consumption	Max 660µA Surge current: 30mA (in 5 ms.); Alarm: 8mA with Alarm LED Latched. Nominal 550µA
Visual Indicator	Bi-Color LED (green/red)
Operating Temperature	32°F to 120°F (0°C to 49°C) Indoor Use Only
Storage Temperature	-22°F to 70°F (-30°C to 158°C)
Maximum Relative Humidity	Up to 90% RH Non-Condensing
Dimensions	3.4"W x 14.8"H x 2.0"D
Weight	Approx 19 oz.

MODEL DESCRIPTION	
FWC-FSLC-PULL	Single Action Hex Key Lock
FWC-FSLC-PULL2	Dual Action Hex Key Lock
FWC-FSLC-PULLK	Single Action Key Lock
FWC-FSLC-PULL2K	Dual Action Key Lock

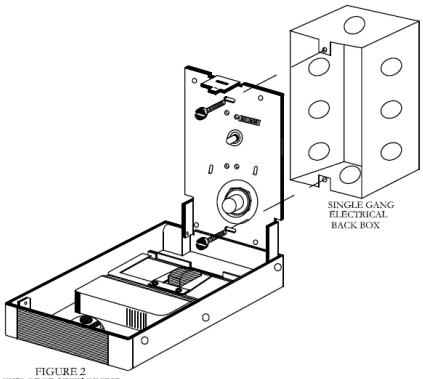

FIGURE 2
EXPLODED VIEW OF THE
MOUNTING OPTION

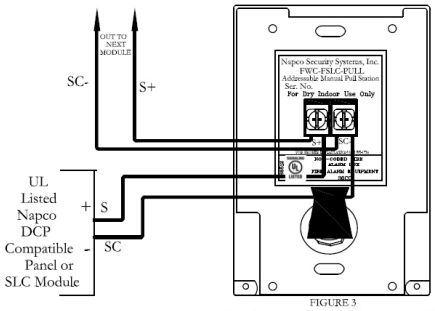

FIGURE 3
TYPICAL WIRING DIAGRAM EXAMPLE, CONNECTED
TO A COMPATIBLE LISTED CONTROL PANEL

Note: Only the same size wire from 12 to 22 AWG may be connected to terminal block TB1 when more than one conductor is being connected under each terminal. Maximum of 2 conductors per terminal.

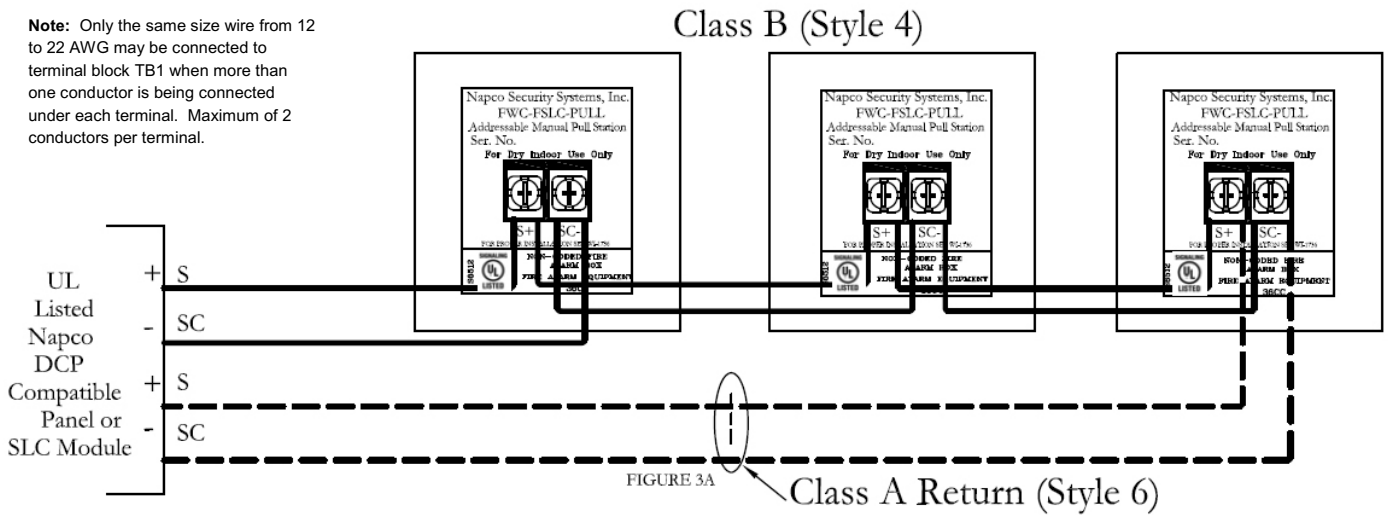

FIGURE 3A

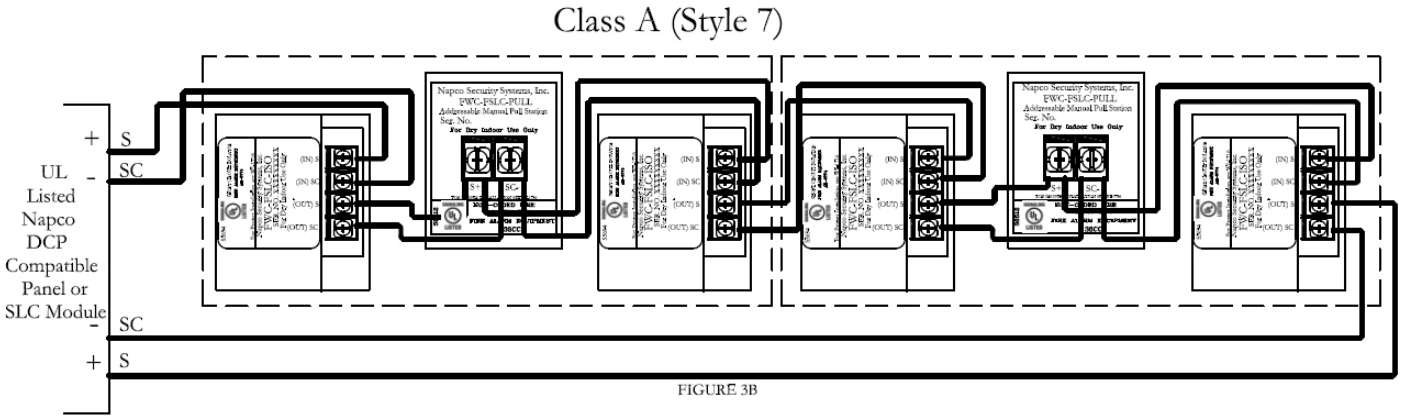

FIGURE 3B

© NAPCO 2013