FIREWOLF Series

Annunciator/Key

Reviewed for Code Compliance
Inspections Division
Approved with Conditions
Date: 02/06/17

FEATURES:

- Listed per ANSI/UL Standard 864, 9th Edition
- Full English Language Display
- 32 Character Alphanumeric display
- Backlit LCD alphanumeric display
- Microprocessor controlled
- Allows for remote System Control
- Full English Language Keypad
- Local Piezo sounder
- Displays custom descriptions
- 7 Fully Supervised Remote Annunciator Keypads per System

DESCRIPTION:

The GEMINI 4 wire bus GEMC-FK1 keypad features a two-line, 32-character alphanumeric LCD display and is compatible with the NAPCO GEMINI C-Series Control Panels. See the Gemini C-Series Installation instructions (WI1653) for more information.

KEYPAD AS PRIMARY USER INTERFACE

For primary user interface, mount label OI343 adjacent to keypad. For keypad address and option jumpers, see product label.

Annunciator/Keypad Operations Features:

- User code required
- Key switch activation
- No code/key required

POWER RATINGS

GEMC-FK1 is powered by the Fire bus of the Gemini C-Series (GEMC) motherboard, GEMC-12V2APS or an appropriately rated UL Listed power limited power supply suitable for Fire alarm service. Deduct these values from the system standby current, as described in the control panel wiring diagram.

AGENCY LISTINGS

UL864 9th Edition: Commercial Fire
UL985: Household Fire Warning System Units
NFPA 72 National Fire Alarm Code
Security Industry Association (SIA) False Alarm Reduction Standard CP-01
CSFM: California State Fire Marshall
NYCFD: NYC Fire Department

WIRING

Connect the keypad wires to the control panel terminals shown in the accompanying table, "**GEMC-FK1 KEYPAD WIRING**".

ELECTRICAL RATINGS

Input Power: 12VDC nominal, 115mA maximum, 35mA if backlighting is disabled (cut jumpers W1, W2 & W3).

PHYSICAL

Dimensions: 5 ⅞" x 4 ⅜" x 1" (WxHxD)

ORDERING INFORMATION

GEMC-FK1: Fire Keypad with a two-line, 32-character alphanumeric LCD display for the Gemini C-Series (GEMC) System, Red.

Napco Security Technologies, Inc., 333 Bayview Ave, Amityville, NY 11701 (800) 645-9445; fax (631) 789-9292

Reviewed for Code Compliance
Inspections Division
Approved with Conditions
Date: 02/06/17

MOUNTING THE KEYPAD

To open the case, insert a screwdriver into either slot at the bottom and push up with a slight twisting moti lease the retainer tab. Repeat for the other slot. Pull out at the bottom and lift off the two hooks at the top. pad features a handy pull-up reference label. Before mounting the keypad onto the wall, push the Sliding Label Plate (with label and felt backing affixed and handle facing forward) down the guides at the rear of the keypad until it snaps into place. Once installed, the Sliding Label Plate cannot be removed without first removing the keypad from the wall. If installing onto a double-gang box, insert mounting screws through the two vertical elongated holes on the left side of the case and into the box. If the box is visible when viewed from the front, adjust the keypad vertically and tighten the screws. Then, using hardware suitable for the mounting surface, add one or two screws at the right side of the keypad case directly into the wall to ensure a secure installation.

Note: *Do not over tighten the screws!* Uneven walls may cause the keypad case to distort. INDOOR / DRY LOCATION USE ONLY

INSTALLING A REMOTE KEYSWITCH

A UL-Listed remote momentary keyswitch can be used for unlocking the GEMC-FK1 Fire keypad #1.

Operation

In UL Commercial Fire installations, mount the keyswitch next to the GEMC-FK1 Fire keypad #1 and install the keyswitch wiring within 20 feet from the control panel and within rigid conduit; the keyswitch switch must be mounted securely to a secured metal box. **Note:** The keyswitch reports as user 0, if "**Open/Close Reporting**" is enabled (see Zone Options in the control panel programming instructions). The keypad will flash "**Keypad Unlocked**" and allow all Fire options to be accessed.

Motherboard Wiring for the Remote Keyswitch

Install the keyswitch as follows:

1. Connect one side of the keyswitch to the control panel terminal #17 (marked "**KEYSW**") and connect the other side of the switch to terminal 19 (marked "**REM PWR [–]**").
2. If you are using the tamper, ensure it is connected to a zone programmed as a Fire "Monitor" zone.

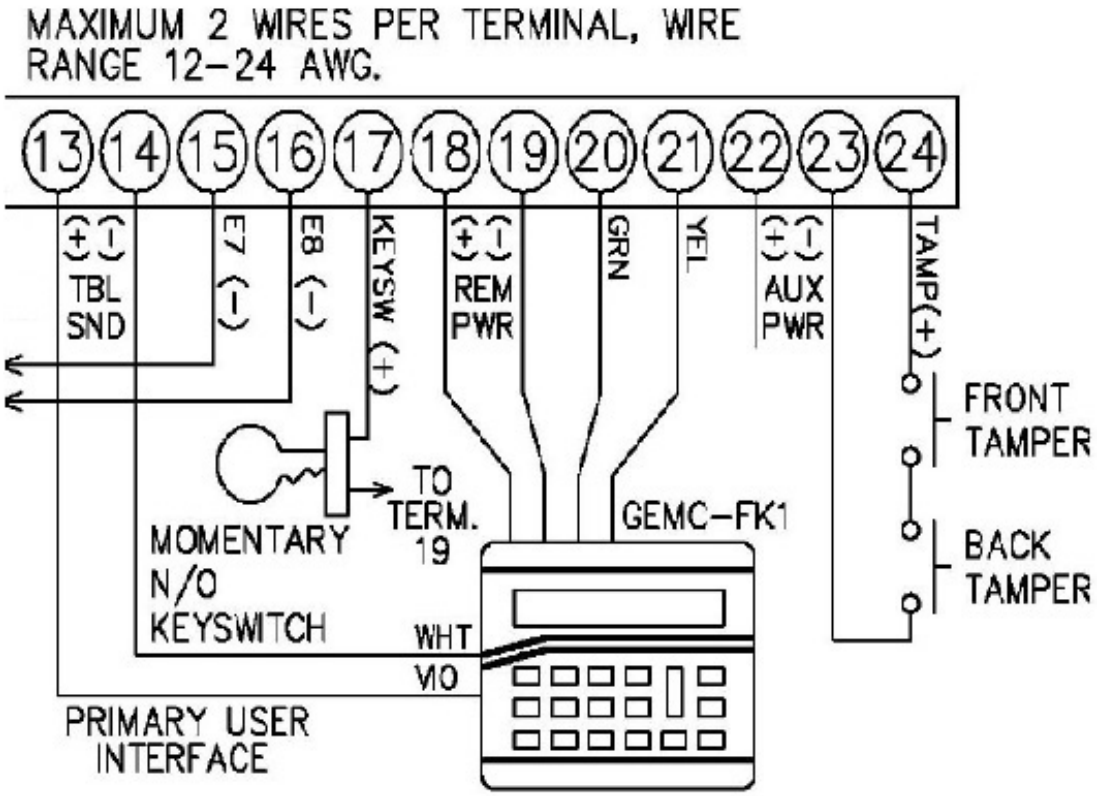

© NAPCO 2013 A622 04/13