NO EXCUSES!

Reviewed for Code Compliance
Inspections Division
Approved with Conditions
Date: 02/06/17

LISTED

# E120V-GT

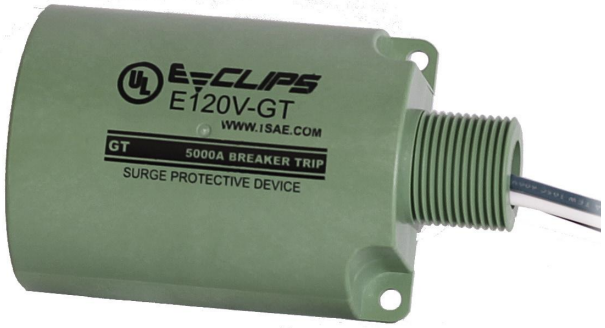

## Hybrid Surge Protection Device

Safety and performance is what Eclips is all about. While there are many varying criteria to be considered for surge protective devices (SPD), if the design engineer neglects the importance there can be serious implications for the client and equipment.

Every piece of electrical equipment is designed to operate at a specified nominal voltage. Typically equipment is designed to handle minor variations. However external sources such as lightning, motors, and short circuits cause wild and damaging variations.

Critical systems wired to your electrical service like Fire Alarm Control Panels (FACP), Mass Notification systems, amplifiers, motors, pumps (HVAC), power boosters and many more must require appropriate levels surge protection. The E120 series is an ideal choice for your 120V AC applications. because it has the robustness not only to absorb a spike, but to clamp long enough to trip the branch circuit breaker and still be functional for additional surges.

The number one cause of destruction, degradation and down-time of critical electrical equipment is from power surges and lightning strikes.

The E120V-GT device is an ideal solution to protect equipment. UL listed it maintains system integrity and protects against transients introduced into / onto electrical lines via poor atmospheric and utility conditions as well as internally generated inductive loads and transient TVSS. It reduces system downtime associated with power surges and lightning strikes. Prevents destruction and degradation of electrical components in the system. Fix your nuisance and non-billable service calls as a result of transients and poor power quality and show your customer you care about system integrity.

## Standard Features:

- Available in 120 VAC
- UL Listed 1449 3rd Edition Type 2 & 3
  2X to open circuit breaker @5000A
- Includes lockout & labels per
  NFPA 72 2013 10.6.5.2
- Surface or conduit mounting
- Diagnostic indicator light
- Self restoring
- 3 Wire device (18” length)

ISO 9001
REGISTERED
COMPANY

Made In U.S.A.

NFPA

- Uses UL Recognized Components


E-CLIPS
Space Age Electronics, Inc.
www.1SAE.com
**800.486.1723** Toll Free
508.485.0966 Local
508.485.4740 Fax


*No Excuses, Just Solutions!*

SPACE AGE ELECTRONICS, INC.

Reviewed for Code Compliance
Inspections Division
Approved with Conditions
Date: 02/06/17

# Specifications:

All 120volt AC equipment will have Transient Voltage Surge Suppression (TVSS) protection manufactured by Space Age Electronics, Inc., part number E120V-GT ECLIPS Brand. The Unit shall be UL listed to standard 1449 rev 3. The unit will be labeled clearly with indelible ink. Mounting can be conduit mounted with a ¾" pipe threaded nipple to secure in panel, or surface panel mount with 2 external mounting holes. The unit shall have thermal fuses to protect against fire in short circuit conditions. The E120V will have 18" long, 14 gauge wires (3x) ground wire must be green. The enclosure will be a non dielectric material UL94 QMFZ2/8 grade material providing UV protection. The unit shall provide visual indication (LED) that unit is protecting and functioning.

## Specifications - Performance:

| | |
|---|---|
| Short Circuit Current Rating (SCCR) : | 5KA |
| Maximum Surge Current (8x20µs) : | 25,000 Amps |
| Enclosure Material : | UL94 QMFZ2/8 (green) |
| Energy Dissipation Joules : | 500 Joules |
| VPR=700(L – N) 700 (L – G) 600 (N – G) | |
| Capacitance : | < 2,000 pf |
| Clamping Response Time : | < 5 nanoseconds |
| Current : | Non-Load Bearing |
| Max Operating Voltage (MCOV) : | 140 volts AC, 50/60 Hz |
| Clamping Voltage : | 230 Volts RMS |
| Design : | Thermally Fused Hybrid |
| Operation Indicators : | LED |
| Surviveability : | UL rated X2 @5000 Amps to open Series external circuit breaker |

## Specifications - Operating:

| | |
|---|---|
| Service Voltage : | 120 Single Phase |
| Circuits Protected : | L-N L-G N-G |
| Connection Type : | Hardwired |
| Installation Configuration : | Parallel |

## Specifications - Physical:

| | |
|---|---|
| Weight : | 5.2oz |
| Dimensions : | 2.75" x 1.55" x 4" long |
| Operation Temperature : | -40 to +85º C |

## Specifications - Compliance:

| | |
|---|---|
| UL Listed : | 1449 Third Edition - VZCA |
| File Number : | E319370 Vol. 1 Sec. 1 |

## Mechanical Drawing:

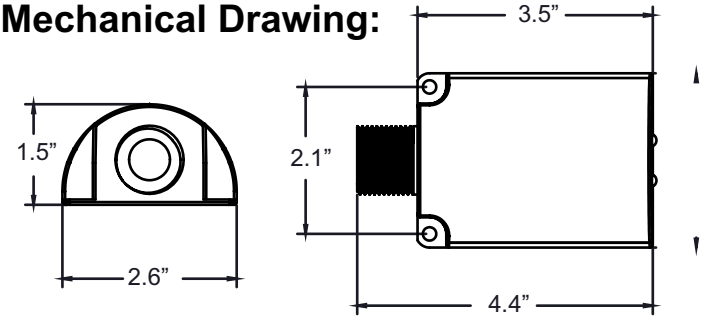


## Wiring Diagram:

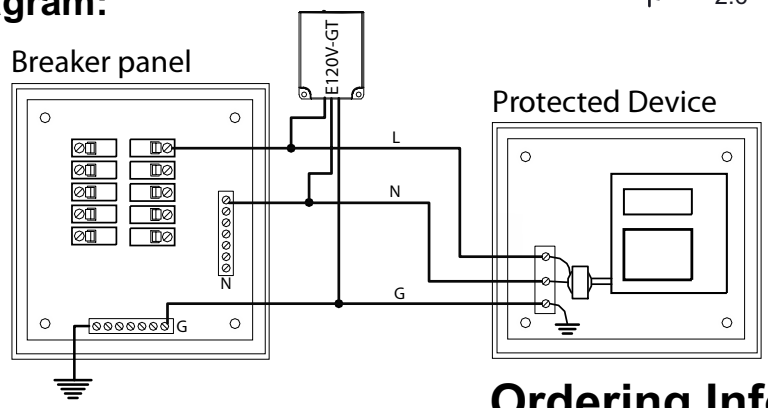


## Ordering Information:

| Part # | Description |
|---|---|
| **E120V-GT** | **120V Hybrid Surge Protective Device** |
| **ELOCK-FA** | **Circuit Lockout Kit** |


ECLIPS

Space Age Electronics, Inc.
www.1SAE.com
**800.486.1723** Toll Free
508.485.0966 Local
508.485.4740 Fax


*No Excuses, Just Solutions!*


This document is subject to change without notice, see doc # ED0479 for legal disclaimer