NAPCO | COMMERCIAL
FIREWOLF

# Addressable Contact Monitc Modules
# FWC-FSLC-EZM1
# FWC-FSLC-EZM2

Reviewed for Code Compliance
Inspections Division
Approved with Conditions
Date: 02/06/17

**FEATURES:**

- UL 864 9th Edition Listed
- Single input contact monitor
- Fast, reliable contact monitoring
- 127 devices can be used per SLC loop
- Can be programmed to monitor Normally Open (NO) or Normally Closed (NC) contacts
- Operates on Class A or Class B SLC loop

**DESCRIPTION:**

The Napco **FWC-FSLC-EZM1** Fast Response Contact Module and **FWC-FSLC-EZM2** Dual Input Monitor Module are designed to be used with pull stations, water flow switches, and other applications requiring the monitoring of dry contact devices. The interrupt driven communications protocol combines maximum communication reliability and fast response to emergency conditions. The FWC-FSLC-EZM1 and FWC-FSLC-EZM2 contact monitoring modules do not require a separate 24VDC power source.

Each addressable contact monitoring module is programmed with its own unique Signaling Line Circuit (SLC) loop address. The FSLC-EZM2 utilizes only a single address for two (2) distinctive initiating points. The device address is electrically programmable and stored in the onboard EEPROM. Up to 127 devices can be placed on the Napco SLC loop. The module supervises the wiring to the contact with an End Of Line (EOL) resistor. It can be programmed to monitor Normally Open (NO) or Normally Closed (NC) contacts. If a fault condition occurs in the wiring, the module sends a trouble status signal to the fire alarm control panel. When a change of status (contact changes state) is sensed by the FWC-FSLC-EZM1 or FWC-FSLC-EZM2 it sends an interrupt to the control panel indicating that an alarm has occurred.

SIGNALING UL LISTED

**LISTINGS:**

- UL864 9th Edition: Commercial Fire
- NFPA 72 National Fire Alarm Code
- CSFM: California State Fire Marshall
- NYCFD: NYC Fire Department

**SPECIFICATION:**

FWC-FSLC-EZM1
The contractor shall furnish and install where indicated on the plans, addressable contact monitoring modules Napco FWC-FSLC-EZM1. The modules shall be UL Listed and compatible with the Napco communication protocol supporting control panel. The device address shall be electrically programmable and stored in the EEPROM. The FWC-FSLC-EZM1 shall fit inside a single gang electrical back box.

FWC-FSLC-EZM2
The FWC-FSLC-EZM2 addressable SLC two zone conventional input module provides two independent contact monitoring circuits while only utilizing one address on the SLC loop. Designed to be used with pull stations, water flow switches, and other applications requiring the monitoring of dry contact alarm initiating devices. The FWC-FSLC-EZM2 shall fit inside a single-gang electrical back box.

| | FWC-FSLC-EZM1 |
|---|---|
| **Maximum Applied Voltage** | S, SC: 41 VDC |
| **Nominal Supply Voltage** | S, SC: 33 VDC |
| **Average Current Consumption** | 550µA (Typical) |
| **Maximum Current Consumption** | Surge Current 30mA (in 5 ms.)<br>Alarm and response: 30mA (in 20 ms.)<br>No Alarm and no response: 660µA |
| **End of Line Device for Input** | Napco part # 0400-02350 10KΩ |
| **Visual Indicator** | Bi-Color LED (green/red) |
| **Maximum Relative Humidity** | Up to 90% RH Non-Condensing |
| **Dimensions** | 2.8"W x 0.7"H x 0.7"D |
| **Weight** | Approx 3 oz. |
| **Operating Temperature** | 32°F to 120°F (0°C to 49°C) Indoor Use Only |

| | FWC-FSLC- |
|---|---|
| **SLC Applied Voltage** | Rated Range 25.3 - 39VDC |
| **SLC Current Consumption** | Max 720µA; Nominal 600µ |
| **IDC Circuit Rating** | 3.2VDC, 100µA |
| **End of Line Device for Input** | Napco part # 0400-02370 22KΩ |
| **Visual Indicator** | Bi-Color LED (green/red) |
| **Maximum Relative Humidity** | Up to 90% RH Non-Condensing |
| **Dimensions** | 4.2"W x 4.7"H x .85"D |
| **Weight** | Approx 3 oz. |
| **Storage Temperature** | -22°F to 70°F (-30°C to 158°C) |
| **Operating Temperature** | 32°F to 120°F (0°C to 49°C) Indoor Use Only |

Reviewed for Code Compliance
Inspections Division
Approved with Conditions
Date: 02/06/17

INITIATING DEVICE CIRCUIT (IDC) - NFPA STYLE B (FOR WIRING LENGTH REFER TO TABLE 1)

TABLE 1: WIRING LIMITATIONS

| Maximum Distance Between Module and EOL Device | |
|---|---|
| 14 AWG | 1500 Ft. |
| 16 AWG | 900 Ft. |
| 18 AWG | 550 Ft. |

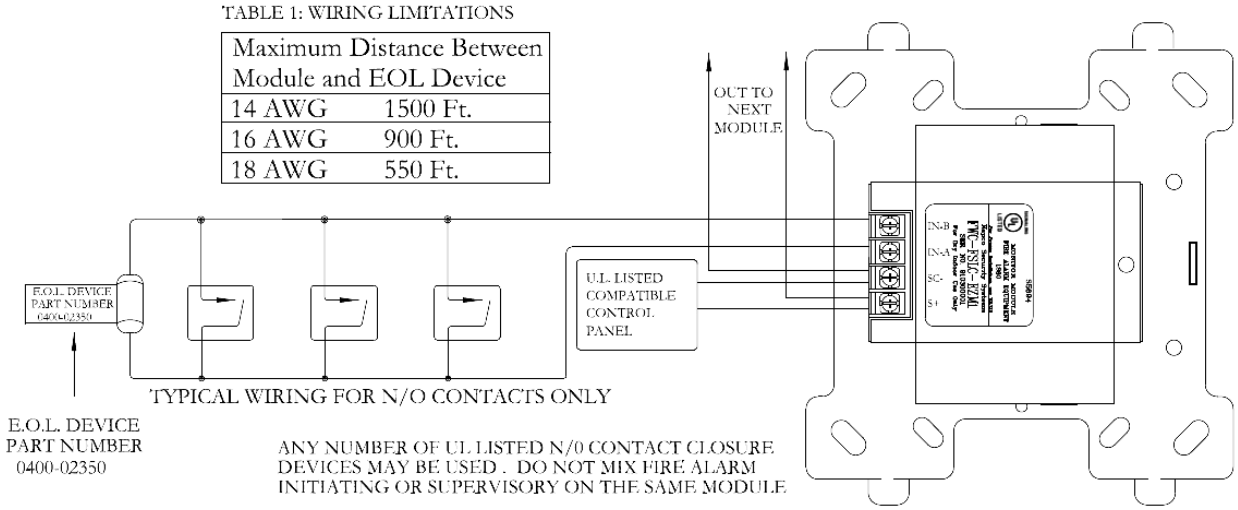


FIGURE 3.

TYPICAL WIRING DIAGRAM EXAMPLE, CONNECTED TO A COMPATIBLE LISTED CONTROL PANEL

## INITIATING DEVICE CIRCUIT (IDC) - NFPA STYLE B

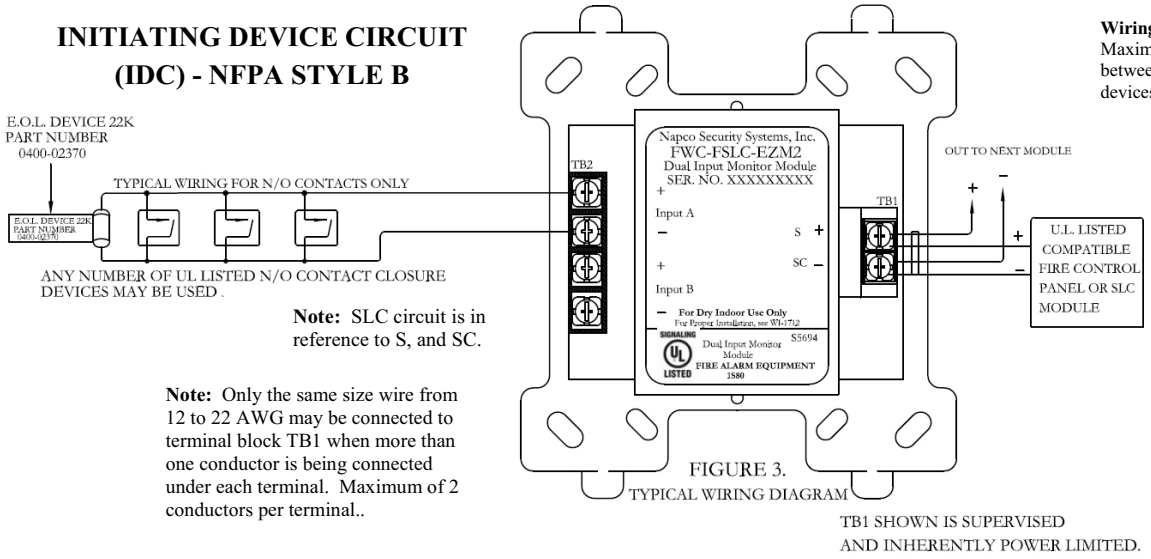


**Wiring Limitations:**
Maximum line impedance between input and initiating devices: 3.50Ω

**Note:** SLC circuit is in reference to S, and SC.

**Note:** Only the same size wire from 12 to 22 AWG may be connected to terminal block TB1 when more than one conductor is being connected under each terminal. Maximum of 2 conductors per terminal..

FIGURE 3.
TYPICAL WIRING DIAGRAM


© NAPCO 2013