NAPCO | COMMERCIAL
FIREWOLF

Addressable 6" Mounting Base FWC-FSLC-SMK6B

Reviewed for Code Compliance
Inspections Division
Approved with Conditions
Date: 02/06/17

FEATURES:

- UL Listed
- Designed for use with all NS analog sensors
- Available in 4 and 6 inch models
- Contains a security locking tab for tamper protection

DESCRIPTION:

The Napco **FWC-FSLC-SMK6B** bases are designed specifically for use with the Napco Analog models FWC-FSLC-SMK and FWC-FSLC-HEAT.

The FWC-FSLC-SMK6B common mounting base allows for complete compatibility for all of the Napco Addressable Series Analog sensors. The bases are lightweight and very thin, providing a low profile once installed. The solder-less screw terminals enable quick and easy wiring connections.

APPLICATION:

The Napco FWC-FSLC-SMK6B mounting base is electronics free and features a simple rugged design with screw terminals for wiring connections. A common mounting base allows for easy sensor interchanges while maintaining loop continuity when sensors are removed. A simple anti-tamper head locking system is provided that is enabled by removing a small plastic tab on the back of the sensor. Once locked, the head can only be removed using a small diameter screwdriver.

ENGINEERING SPECIFICATION:

The base shall permit direct interchange with the NAPCO FSLC-SMK Photoelectric Smoke Sensor, and FSLC-HEAT Heat Sensor.

The vandal-resistant, security locking feature shall be used in those areas as indicated on the drawing. The locking feature shall be optional and can be implemented when required.

SIGNALING UL LISTED

LISTINGS:

- UL268: Smoke Detectors for Fire Alarm Signaling Systems (FWC-FSLC-SMK, FWC-FSLC-SMK6B)
- UL268A: Smoke Detectors for Duct Application (FWC-FSLC-SMKALG replacement head for the FWC-FSLC-DUCT)
- UL521: Heat Detectors for Fire Protective Signaling Systems (FWC-FSLC-HEAT)
- NFPA 72: National Fire Alarm Code
- CSFM: California State Fire Marshall

Security Feature	Plastic Tamper-lock
Color & Material	Bone PC / ABS Blend
Dimensions	FWC-FSLC-SMK6B: 6 inches
Compatible with	FWC-FSLC-SMK, FWC-FSLC-HEAT

CITY OF PORTLAND, MAINE
RESURGAM
Reviewed for Code Compliance
Inspections Division
Approved with Conditions
Date: 02/06/17

SPECIFICATIONS	
Operating Voltage Range (V_H) (S-SC)	24 ~ 40.7 VDC; 41 VDC Max
Operating Temperature	14°F to 122°F (-10°C to 50°C)
UL Listed Temperature	32°F to 115°F (0°C to 47°C)
Storage Temperature	-4°F to 140°F (-20°C to 60°C)
Dimensions	5-7/8"D x 15/32"H
Environment	Indoor Use Only
Visual Alarm / Power Indicator	See Sensor

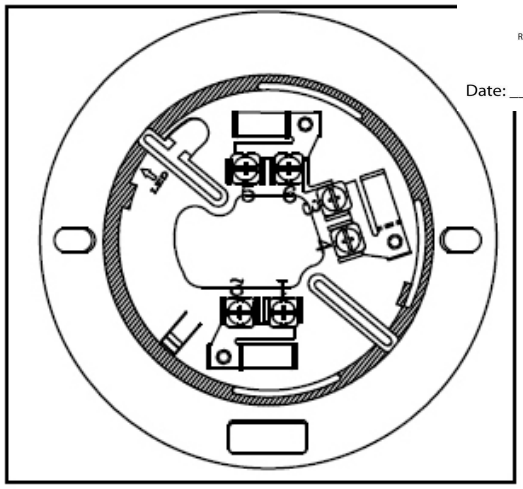

FWC-FSLC-SMK6B BASE

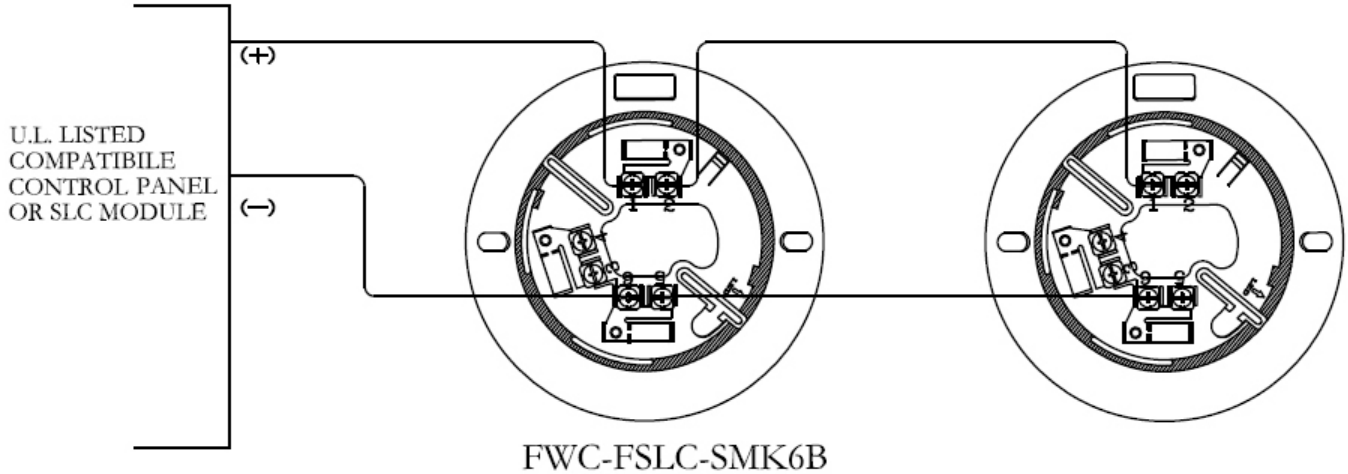

FWC-FSLC-SMK6B

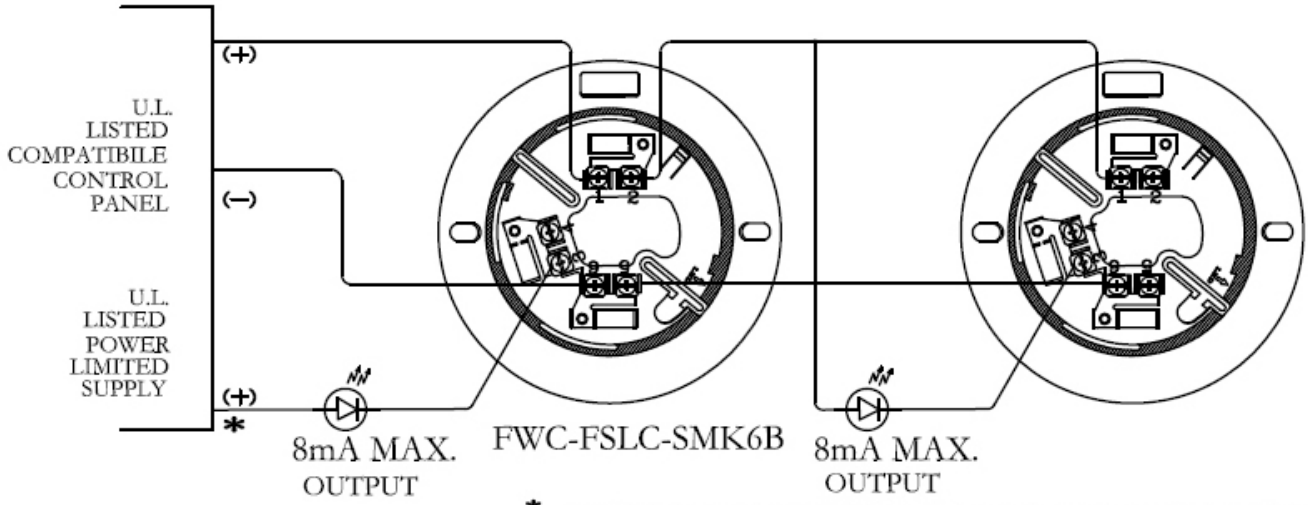

* - OPTIONAL WIRING CONFIGURATIONS FOR REMOTE OUTPUT

© NAPCO 2013