NAPCO | COMMERCIAL
FIREWOLF

Wireless RF Receive
GEMC-RECV

Reviewed for Code Compliance
Inspections Division
Approved with Conditions
Date: 02/06/17

FEATURES:

- Commercial Security
- Commercial Fire
- Auto enroll Device feature
- 200 Wireless Zones
- All points programmable as Security
- All points programmable as Fire
- All points can be a mix of Security and Fire
- Four Receiver Capable - Full Supervision
- Signal Strength flashing LED
- Front Cover Tamper
- Rear mounting Tamper

SIGNALING UL LISTED

DESCRIPTION

The Gemini **GEMC-RECV** RF Receiver is the hard-wired interface to Napco's Wireless-Ready™ FIREWOLF C-Series control panels (see WI1653 for installation instructions).
The wireless system is comprised of a compatible GEMC-Series control panel, at least one GEMC-RECV receiver, and one or more companion GEMC-Series (Commercial) or GEM-Series (Residential Fire or Burglary only) transmitters. The transmitters may be wireless smoke detectors, space-protection devices, window/door sensors, or other listed devices that report zone status and supervision information to the receiver without the use of wires.
There are three differences between the GEM-RECV and GEMC–RECV-Series wireless receivers:

1. The Signal Strength level 5 is adjusted to 3dB greater than the Signal Strength level 4.
2. The green Signal Strength LED is activated at SS3 on the GEMC–RECV instead of SS4 on the GEM-RECV Series.
3. An additional back tamper has been added to the GEMC-RECV to detect removal from the mounting location.

THE GEMC-RECV RECEIVER

The GEMC-RECV can accommodate up to 200 wireless zones. The number of transmitters is limited by the associated Gemini C-Series control panel selected, because only the number of zones supported by the panel can be mapped to transmitters. The receiver is connected to the Gemini C-Series control panel 4-wire Fire bus (or Burglary bus for Burg-only applications). For Fire-only applications or Fire-Burg combination applications, the GEMC-RECV must be connected to the Gemini C-Series control panel Fire bus (see the Gemini C-Series installation instructions WI1653). The receiver monitors each transmitter, updating transmitter status as reports are received, and conveys this information to the control panel. Also monitored is the elapsed time since the last report from each transmitter. If no report of sufficient signal strength is received within a programmed time, a Supervision Failure will result.

AGENCY LISTINGS

- UL365: Police Station Alarm Units
- UL609: Local Burglar Alarm Units and Systems
- UL864 9th Edition: Commercial Fire
- UL985: Household Fire Warning System Units
- UL1023: Household Burglar Alarm System Units
- UL1610: Central Station Burglar Alarm Units
- NFPA 72 National Fire Alarm Code
- Security Industry Association (SIA) False Alarm Reduction Standard CP-01
- CSFM: California State Fire Marshall
- NYCFD: NYC Fire Department

ORDERING INFORMATION

GEMC-RECV: Commercial Fire and Burg approved Wireless Receiver, supports 255 devices, maximum of (4) receivers supported by GEMC system.

Reviewed for Code Compliance
Inspections Division
Approved with Conditions
Date: 02/06/17

GEMC-RECV WIRING DIAGRAM

NAPCO

REFER TO WI1682

RECEIVER NO.	JUMPER
1	1 2 OR 1 2
2	1 2
3	1 2
4	1 2

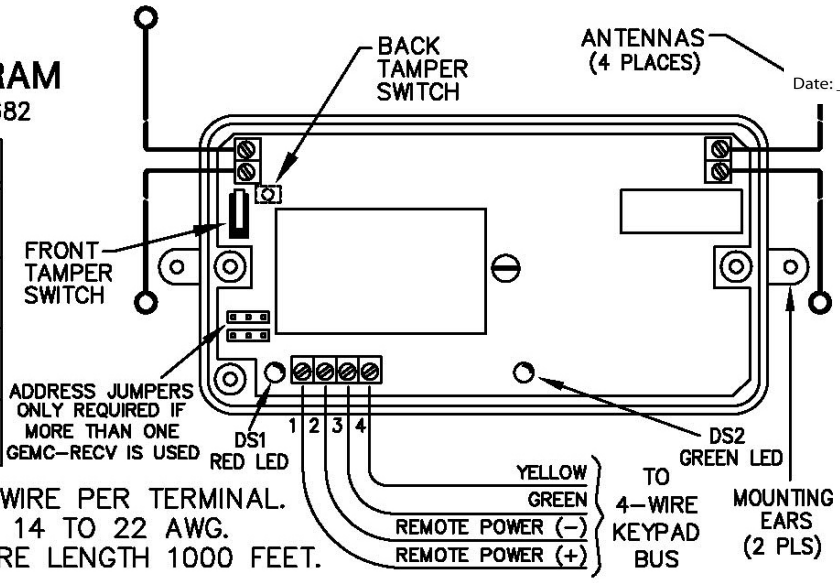

Rated 12.5 - 9.4VDC, 70mA

LA2704 INDOOR / DRY LOCATION USE ONLY

MAXIMUM 1 WIRE PER TERMINAL.
WIRE RANGE 14 TO 22 AWG.
MAXIMUM WIRE LENGTH 1000 FEET.

CONTROL PANEL

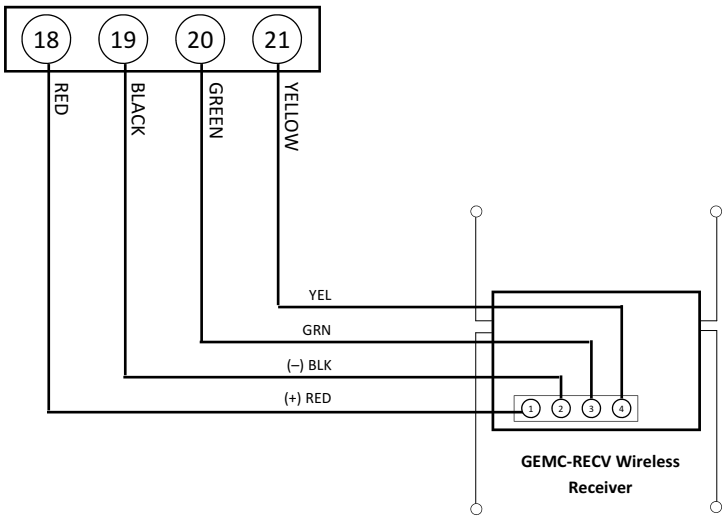

© NAPCO 2013