Reviewed for Code Compliance
Inspections Division
Portland, Maine
Date: 02/02/17

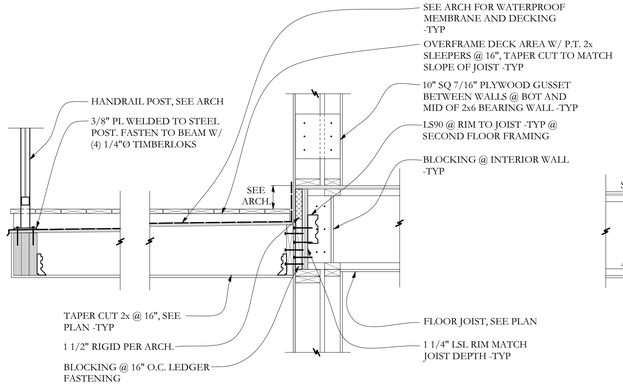

SECTION J S-2.1 3/4"=1'-0

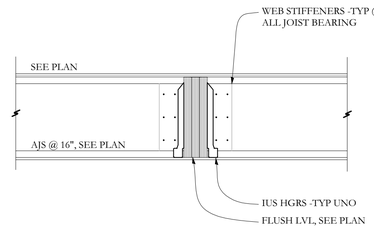

SECTION K S-2.1 3/4"=1'-0

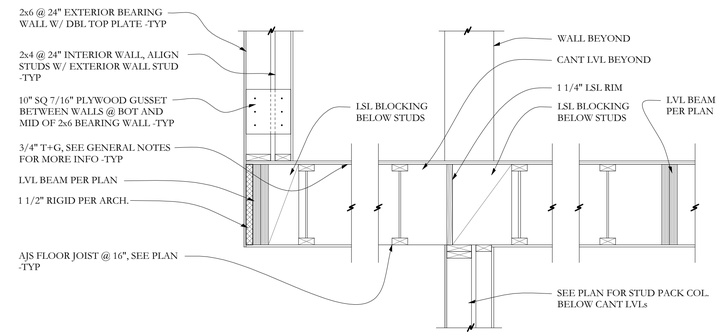

SECTION L S-2.1 3/4"=1'-0

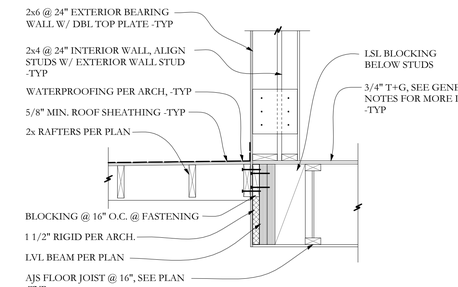

SECTION M S-2.1 3/4"=1'-0

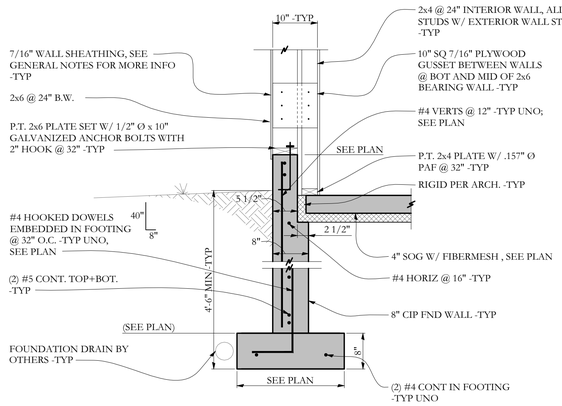

SECTION E S-2.1 3/4"=1'-0

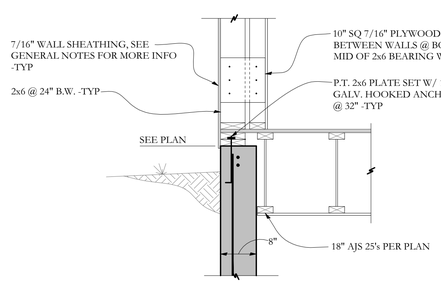

SECTION F S-2.1 3/4"=1'-0

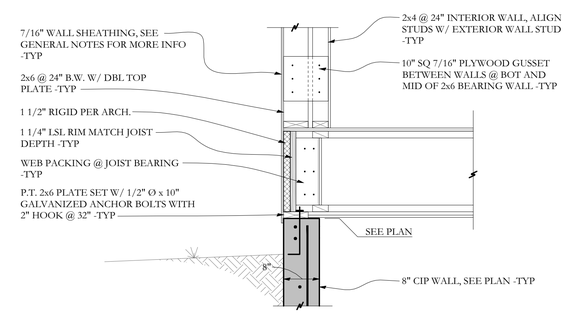

SECTION G S-2.1 3/4"=1'-0

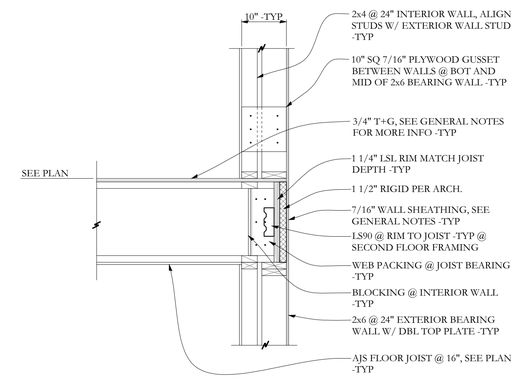

SECTION H S-2.1 3/4"=1'-0

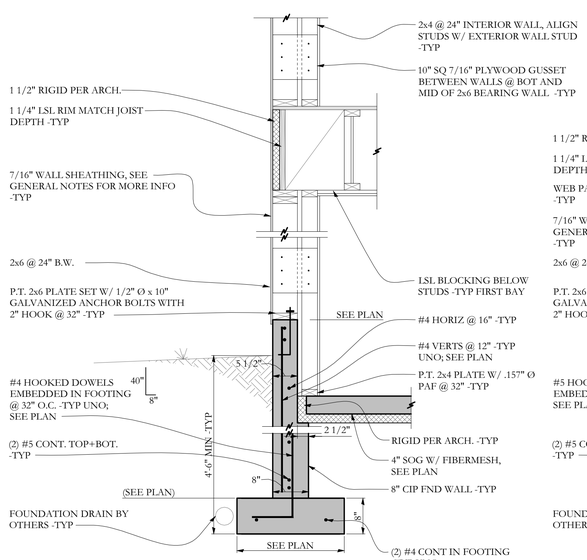

SECTION A S-2.1 3/4"=1'-0

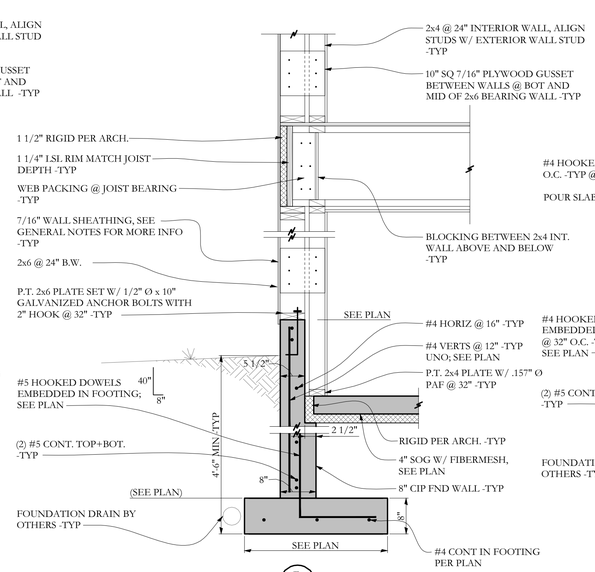

SECTION B S-2.1 3/4"=1'-0

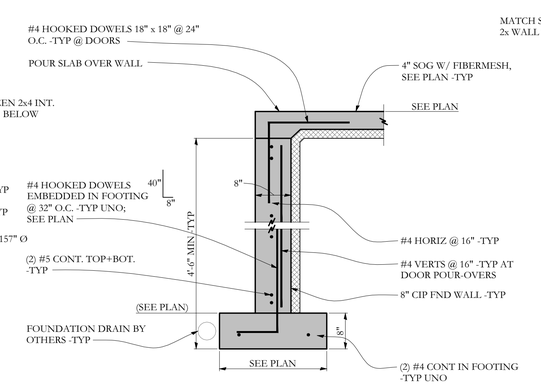

SECTION C S-2.1 3/4"=1'-0

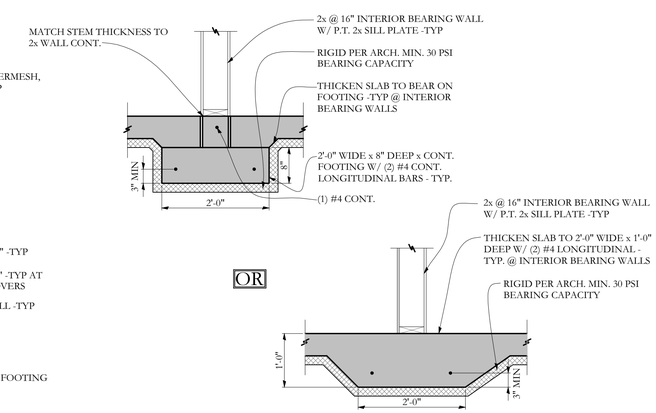

SECTION D S-2.1 3/4"=1'-0

KAPLAN THOMPSON ARCHITECTS
102 EXCHANGE STREET
PORTLAND, ME 04101
207-842-2888
KAPLANTHOMPSON.COM

PROJECT:
NEW TWO-FAMILY DWELLING

380 DANFORTH
PORTLAND ME 04101

STRUCTURAL :

Structural Integrity Consulting Engineers
77 Oak Street
Portland, ME, 04101
p. 207-774-4614
f. 866-793-7835
www.structuralinteg.com

BUILD WITH CONFIDENCE
© 2016 Structural Integrity Consulting Engineers, Inc.

STATE OF MAINE
AARON C. JONES
No. 10968
LICENSED PROFESSIONAL ENGINEER
11-29-16

PROJECT NO:	16-0117
DATE:	11/29/16
DRAWN BY:	JCS
PHASE:	

DETAILS

S-2.1