**ONLY BACKFILL 1/2 HT BEFORE GARAGE LEVEL FLOOR SYSTEM IN PLACE

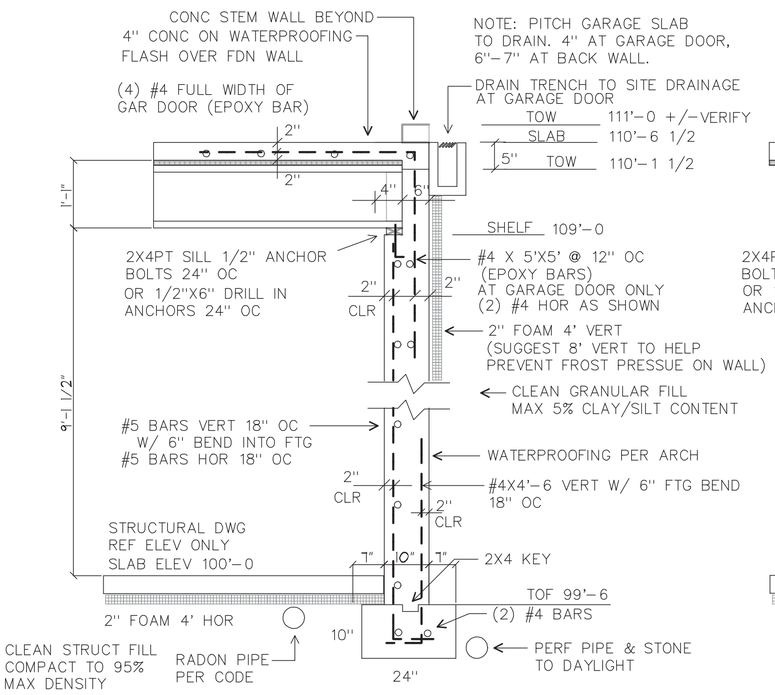

1/S2 10" FDN WALL AT GARAGE DOOR WALL

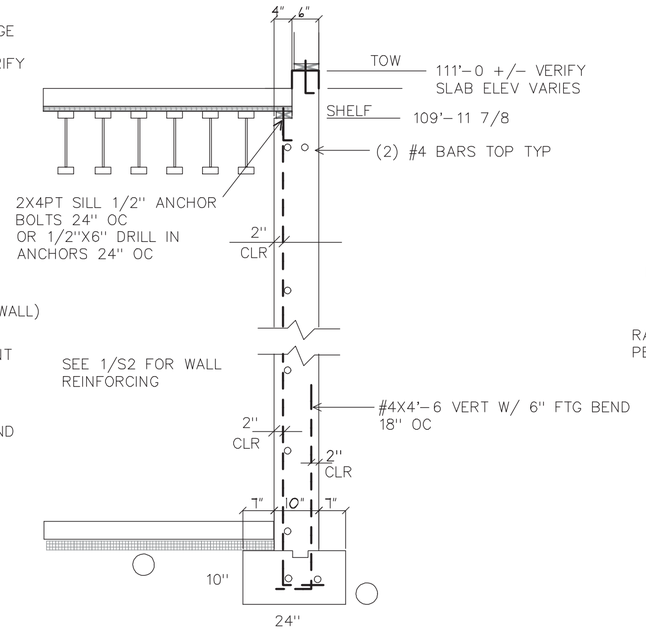

2/S2 10" SIDE WALL DETAIL

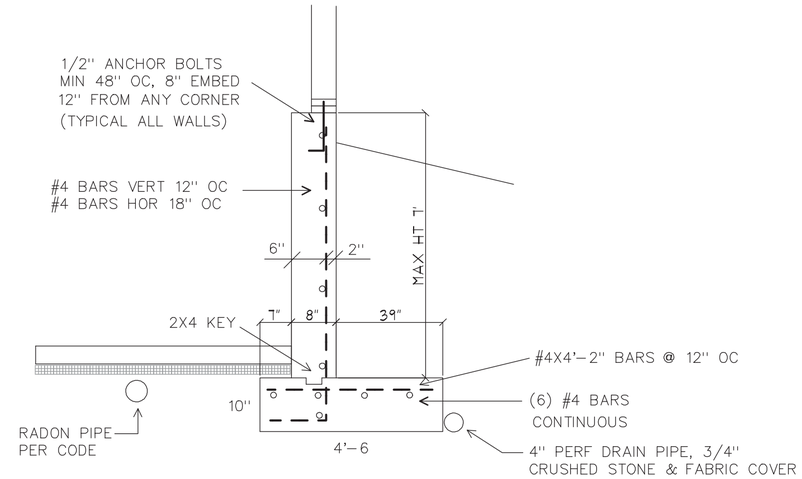

3/S2 8" FDN WALL W/ STUD WALL

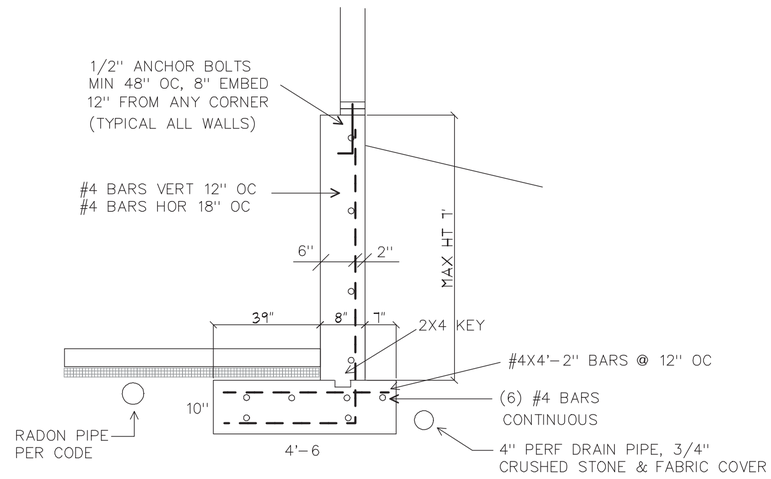

3A/S2 8" FDN WALL W/ STUD WALL AT TIGHT PROPERTY LINE ONLY

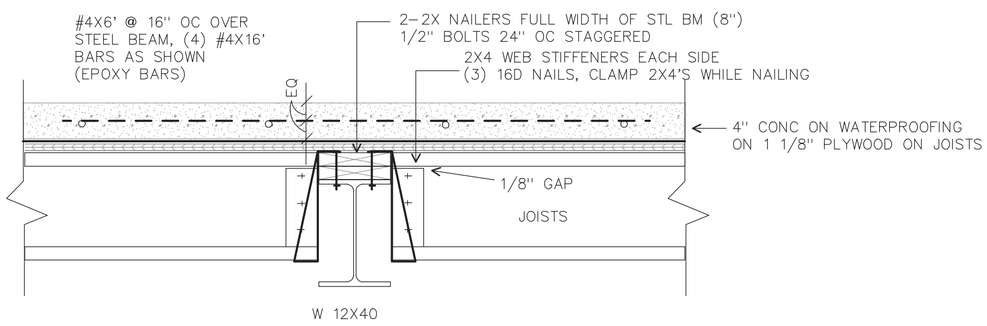

4/S2 GARAGE FLOOR STEEL BEAM

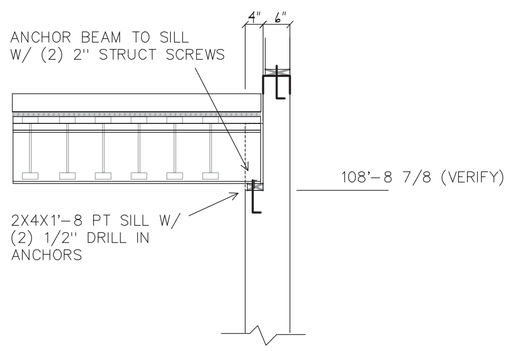

5/S2 STEEL BEAM POCKET

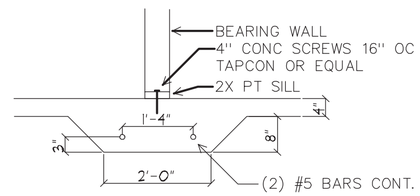

NOTE: PLACE NO HEAT TUBES IN THICKENED SLAB AREAS TO AVOID WALL AND POST SCREWS/BOLTS

6/S2 THICKENED SLAB DETAIL

REVISIONS
11/6/17 3A/S2 UPDATE

Civil & Structural Design
Randy D. Scamfer, P.E
207-273-3021
FAX 273-3021
427 Western Road
Warren, ME 04864

© COPYRIGHT 2017

STATE OF MAINE
RANDOLPH D. SCAMFER
No. 5863
LICENSED
PROFESSIONAL ENGINEER

Randy D. Scamfer

MURPHY GARAGE

DRAWN : RDS	CHECKED : RDS
DATE : 10/12/17	
SCALE : 1/4" = 1'-0	
JOB NO. : 2017089	
SHEET S-2	

C:\DATACAD 16\DRAWINGS\DATACAD16_14\MARCEL VALLIERE\MURPHY GARAGE\MURPHGARI.AEC
11/6/2017 4:18 PM