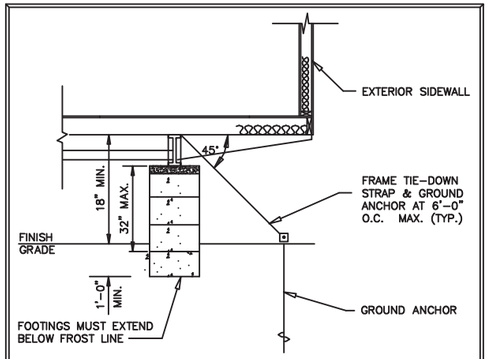

SECTION A–A

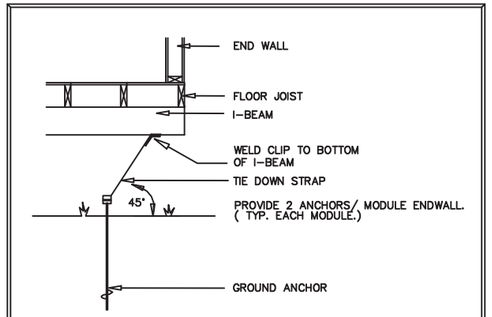

Z ENDWALL TIE DOWN DETAIL

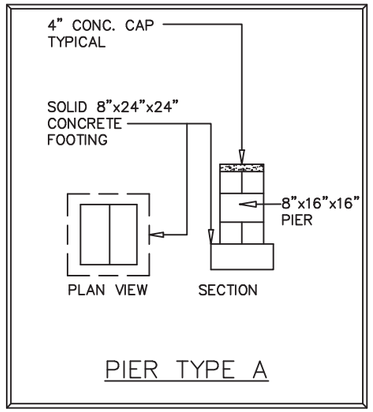

PIER TYPE A

FOUNDATION DIMENSIONS

A MODULE WIDTH	B PIER TO MODULE EDGE	C STEEL BEAM SPACING
11'–8"	22 1/4"	95 1/2"

D MAXIMUM PIER SPACING	MINIMUM SOIL BEARING CAPACITY
7'–5" 9'–0"	2000 PSF 3000 PSF

NOTE:
THE NUMBER OF PIERS SHOWN ON THIS FOUNDATION PLAN IS NO INDICATION OF THE AMOUNT OF PIERS REQUIRED AND NEEDED FOR THIS BUILDING. SEE MAXIMUM PIER SPACING CHART TO ABOVE FOR THE CORRECT NUMBER OF PIERS REQUIRED FOR EACH SOIL BEARING CAPACITY.

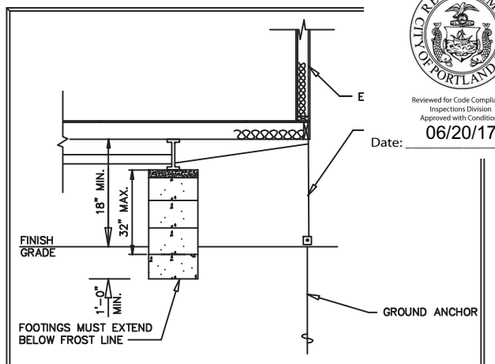

SECTION X–X

CITY OF PORTLAND, MAINE
RESURGAM
Reviewed for Code Compliance
Inspections Division
Approved with Conditions
Date: 06/20/17

NOTE:
THIS FOUNDATION PLAN IS PROVIDED FOR REFERENCE AS A TYPICAL STANDARD. ACTUAL FOUNDATION CONDITIONS MUST BE EVALUATED FOR APPLICABILITY IF THIS PLAN IS TO BE USED. ALTERNATE FOUNDATION PLANS MAY BE DESIGNED BY OTHERS IN ACCORDANCE WITH THE REQUIREMENTS OF THE JURISDICTION HAVING AUTHORITY.

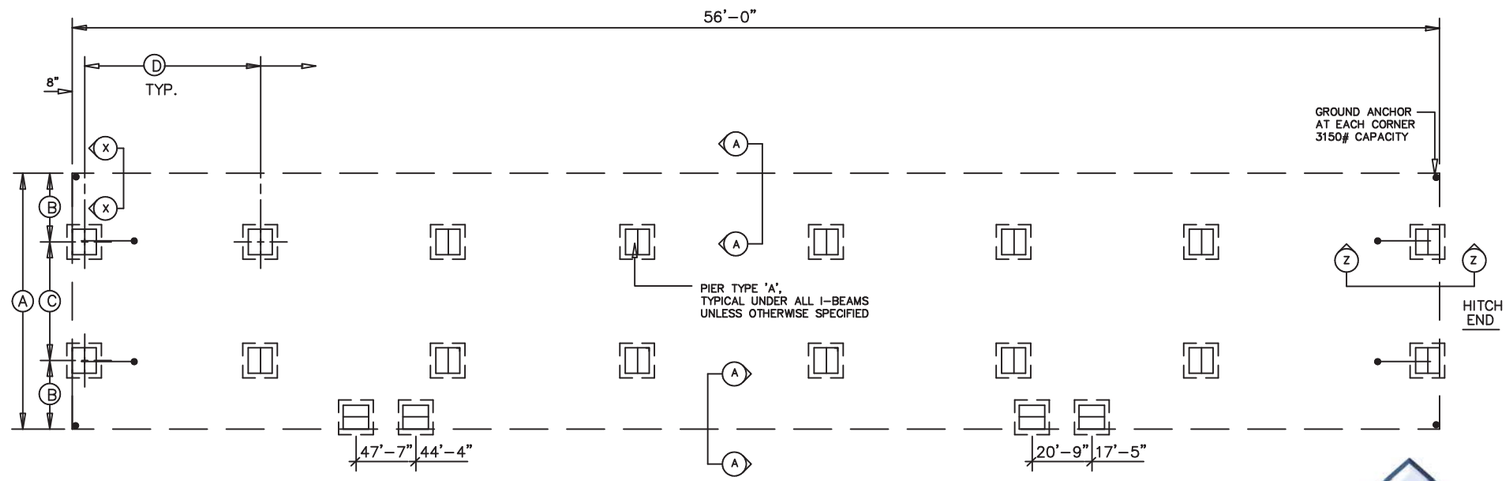

FOUNDATION NOTES:

1. ALL FOUNDATION CONSTRUCTION, MATERIALS, AND INSTALLATION SHALL BE IN ACCORDANCE WITH ALL APPLICABLE STATE AND LOCAL CODES.
2. TIE–DOWN STRAPS TO BE 1–1/4"x .035" TYPE–1, FINISH B, GRADE 1 ZINC COATED STEEL STRAPPING CERTIFIED BY A REGISTERED ENGINEER OR ARCHITECT AS CONFORMING WITH ASTM D3953–91. TIE DOWN STRAPS AND CONNECTING HARDWARE SHALL HAVE 3150# MINIMUM WORKING CAPACITY.
3. EACH GROUND ANCHOR SHALL HAVE A WORKING CAPACITY NO LESS THAN THE SUM OF THE REQUIRED WORKING CAPACITIES OF ALL TIE DOWN STRAPS CONNECTED TO THE GROUND ANCHOR, AND SHALL BE INSTALLED IN ACCORDANCE WITH THE MANUFACTURER'S SPECIFICATIONS. DESIGN OF GROUND ANCHOR, INCLUDING SHAFT LENGTH, NUMBER AND DIAMETER OF HELIXES, ETC., TO BE AS SPECIFIED BY THE GROUND ANCHOR MANUFACTURER FOR THE ACTUAL SOIL TYPE ENCOUNTERED. IF THE HOLDING OR PULLOUT CAPACITIES OF GROUND ANCHORS ARE BELOW THE ASSUMED DESIGN VALUES, THE ARCHITECT/ENGINEER MUST BE CONSULTED FOR AN ALTERNATE ANCHORAGE DESIGN.
4. THE FIRST TIE–DOWN STRAP FROM ENDWALLS SHALL NOT EXCEED 12".
5. ALL PIERS SHALL BE CONSTRUCTED OF CONCRETE MASONRY UNITS CONFORMING TO ASTM C90. MASONRY UNITS SHALL BE LAID IN TYPE M OR S MORTAR OR COVERED WITH SURFACE BONDING CEMENT INSTALLED IN ACCORDANCE WITH ITS LISTING. PIER FOOTINGS SHALL BE AS DESCRIBED ABOVE.
6. MINIMUM CONCRETE FOOTING COMPRESSIVE STRENGTH 2,500 PSI AT 28 DAYS.
7. ALL REINFORCEMENT BARS SHALL COMPLY WITH ASTM A615, GRADE 60. REINFORCEMENT BARS SHALL BE EQUALLY SPACED AND PLACED WITH 3" CLEARANCE FROM BOTTOM AND SIDES OF THE FOOTING.
8. SEE SHEET 1 OF 4 FOR BUILDING DESIGN LOADS.
9. I–BEAM SUPPORT PIERS MAY BE INSTALLED LATERALLY (90° FROM THE ORIENTATION SHOWN ON THE FOUNDATION PLAN). CENTERLINE OF EACH PIER MUST BE LOCATED DIRECTLY BELOW THE I–BEAM CENTERLINE.
10. SOIL BEARING CAPACITY SHOWN ON THIS PLAN IS ASSUMED. IF THE ACTUAL SOIL BEARING CAPACITY IS LESS THAN 2,000 PSF, THE ARCHITECT/ENGINEER MUST BE CONSULTED FOR REQUIRED ALTERNATE FOUNDATION DESIGN. FOOTINGS SHALL BE PLACED ON NON–EXPANSIVE SOILS ONLY.
11. INSTALL BLOCK PIER ON EACH SIDE OF ALL EXTERIOR DOOR OPENINGS. (MANUFACTURER'S RECOMMENDATION ONLY – OPTIONAL WHEN NOT SHOWN) SLIGHT ADJUSTMENT MAY BE REQUIRED TO INSURE OPENABILITY AFTER INSTALLATION OF BUILDING IS COMPLETE.
12. THE AREA UNDER FOOTINGS AND FOUNDATIONS SHALL HAVE ALL VEGETATION, STUMPS, ROOTS, AND FOREIGN MATERIALS REMOVED PRIOR TO THEIR CONSTRUCTION.
13. THE FOUNDATION DIMENSIONS SHOWN ARE NOMINAL. AN INCREASE IN MODULE WIDTH SHOULD BE EXPECTED DUE TO MODULE EXPANSION, SETTING TOLERANCES, ETC. THE FOUNDATION CONTRACTOR SHOULD CONSULT WITH THE MANUFACTURER OF THE MODULES PRIOR TO CONSTRUCTION OF THE FOUNDATION TO DETERMINE THE AMOUNT OF INCREASED WIDTH TO BE ADDED TO THE NOMINAL DIMENSIONS SHOWN ABOVE.

EMC APPROVED 05 19 2017

ARTHUR L. KAY, R.A.
5521 TERRAIN DE GOLF DR.
LUTZ, FLORIDA 33558

LICENSED ARCHITECT
ARTHUR L. KAY IV
ARC4412
5-19-17
STATE OF MAINE

FIRST STRING SPACE INC.
OUR STRENGTH IS TEAMWORK

FIRST STRING SPACE

892 RAILROAD AVE. EAST
PEARSON, GEORGIA 31642 (912) 422–6455

DATE: 4–29–17		
SCALE : NO SCALE		
CODES: SEE NOTES		
STATES: MAINE	REVISIONS:	BY: A.L.K.
FSS5542 12 x 56 EDUCATION		SHEET 1 OF 1
FOUNDATION	DESTINATION: PORTLAND	