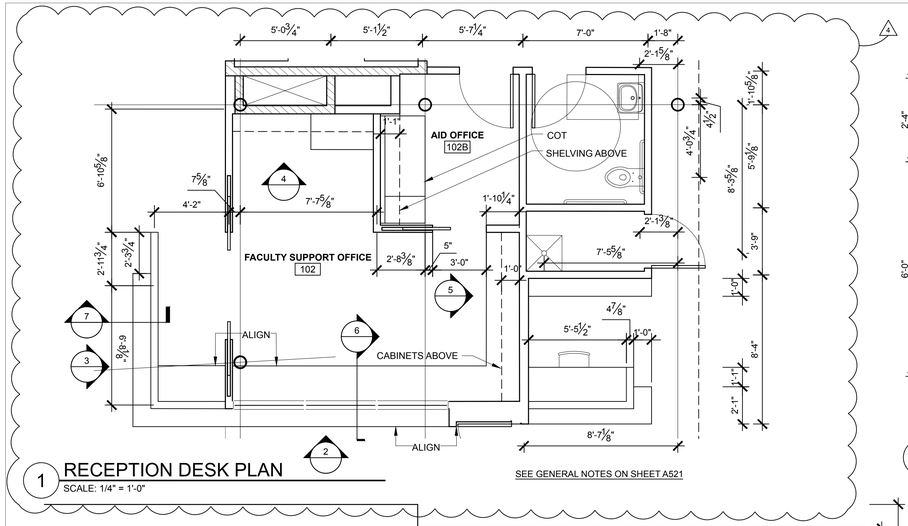

1 RECEPTION DESK PLAN
SCALE: 1/4" = 1'-0"

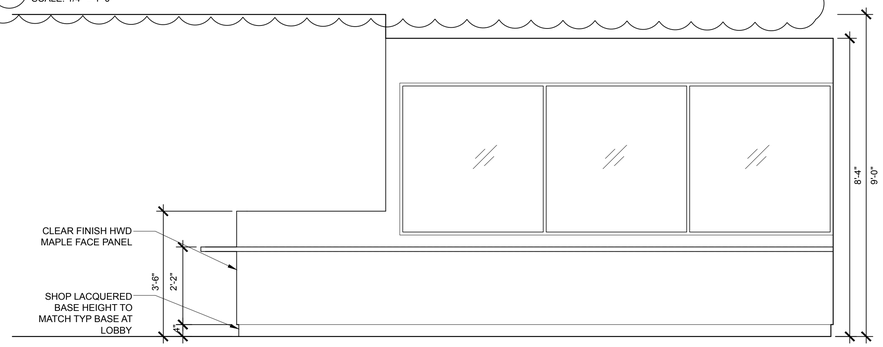

2 RECEPTION DESK ELEVATION
SCALE: 1/2" = 1'-0"

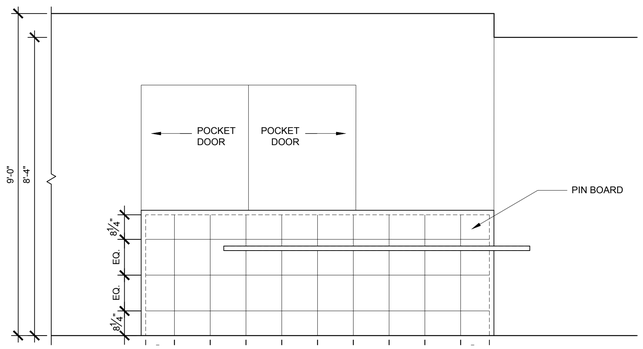

3 RECEPTION DESK ELEVATION
SCALE: 1/2" = 1'-0"

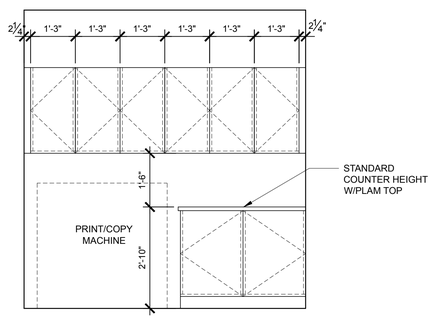

4 RECEPTION DESK ELEVATION
SCALE: 1/2" = 1'-0"

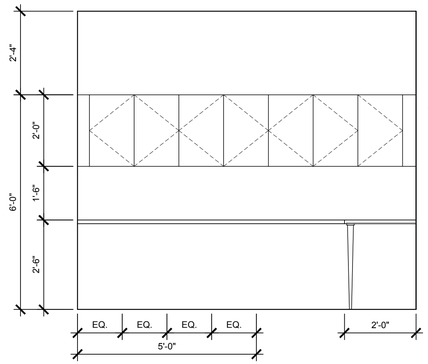

5 RECEPTION DESK ELEVATION
SCALE: 1/2" = 1'-0"

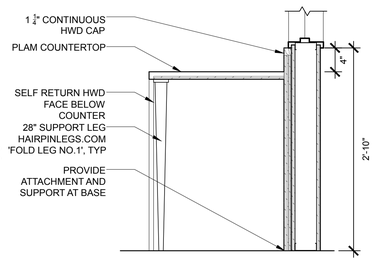

6 RECEPTION DESK SECTION
SCALE: 1" = 1'-0"

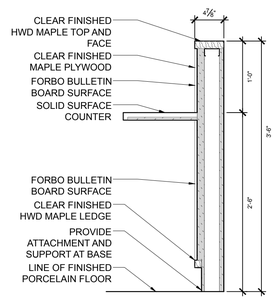

7 RECEPTION DESK SECTION
SCALE: 1" = 1'-0"

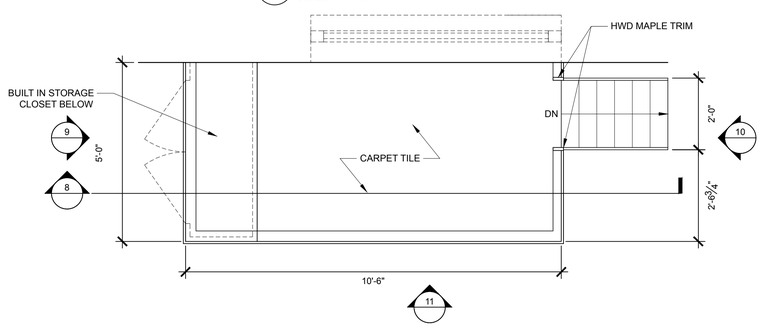

7 TYPICAL CLASSROOM LOFT PLAN
SCALE: 1/2" = 1'-0"

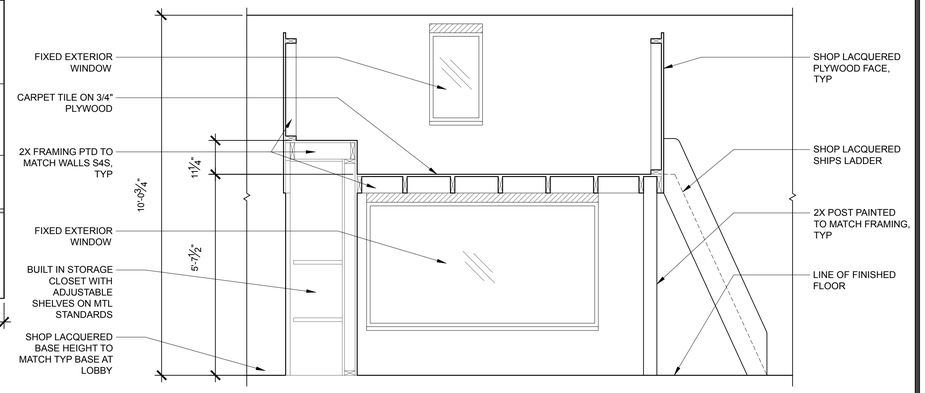

8 TYPICAL CLASSROOM LOFT SECTION
SCALE: 1/2" = 1'-0"

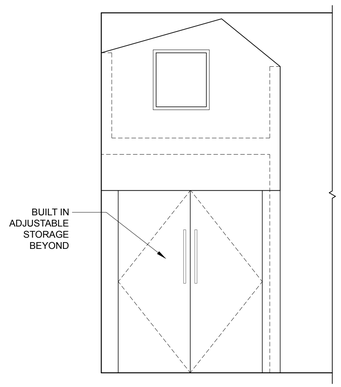

9 TYPICAL CLASSROOM LOFT ELEVATION
SCALE: 1/2" = 1'-0"

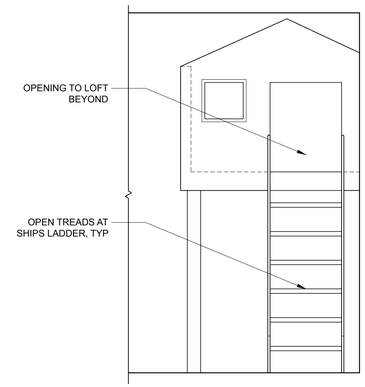

10 TYPICAL CLASSROOM LOFT ELEVATION
SCALE: 1/2" = 1'-0"

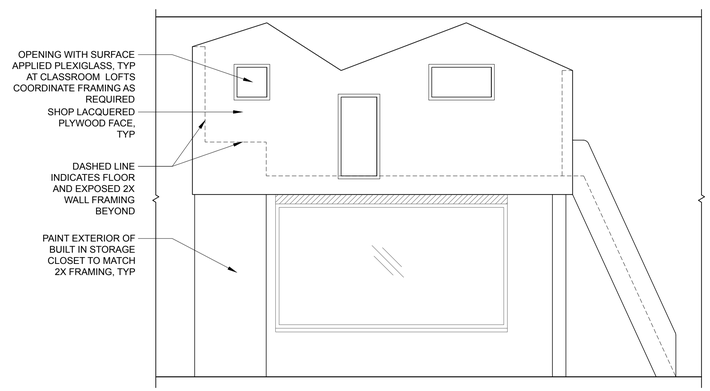

11 TYPICAL CLASSROOM LOFT ELEVATION
SCALE: 1/2" = 1'-0"

scott simons architects
designed for human potential

75 York Street
Portland, Maine 04101
simonsarchitects.com
207.772.4656

PROJECT NAME:

WAYNFLETE LOWER SCHOOL
ADDITION & RENOVATIONS

WAYNFLETE SCHOOL
360 SPRING STREET
PORTLAND, MAINE 04102

SEAL:

LICENSED ARCHITECT
SCOTT R. SIMONS
NO. 2034
STATE OF MAINE

THIS DRAWING IS THE PROPERTY OF SCOTT SIMONS ARCHITECTS (SSA) AND IS NOT TO BE COPIED OR REPRODUCED IN PART OR WHOLE.
2016 © SCOTT SIMONS ARCHITECTS, LLC

REVISION:

1	ADDENDUM #1 - 30 JANUARY 2017	DATE
2	ADDENDUM #2 - 06 FEBRUARY 2017	DATE
3	ADDENDUM #3 - 13 FEBRUARY 2017	DATE
4	ADDENDUM #4 - 31 MARCH 2017 [POST BID]	DATE
5		DATE
6		DATE

DATE OF ISSUE:	12 JANUARY 2017
PROJECT NUMBER:	2013-0050
STATUS:	100% CONSTRUCTION DOCUMENTS ISSUED FOR BID

MILLWORK

A532R