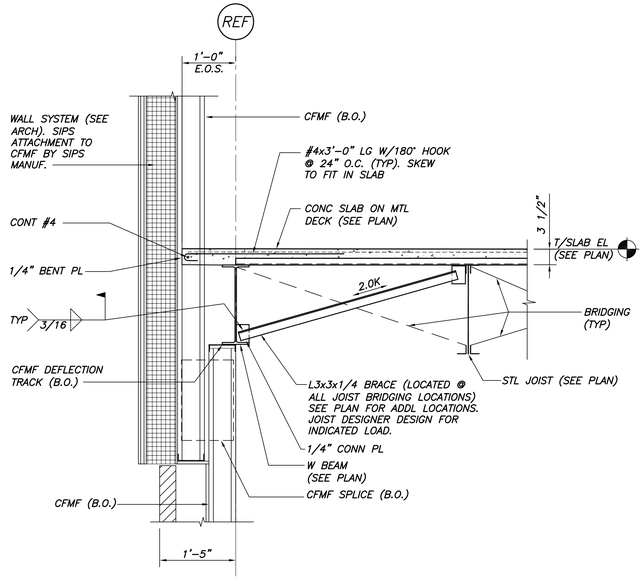

SECTION 1
3/4"=1'-0" S1.2, S1.3

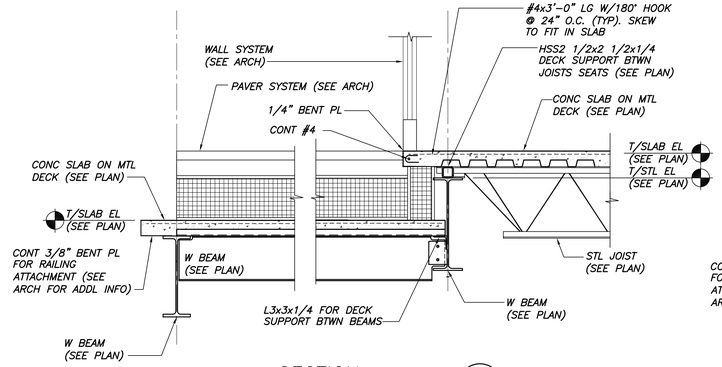

SECTION 2
3/4"=1'-0" S1.2

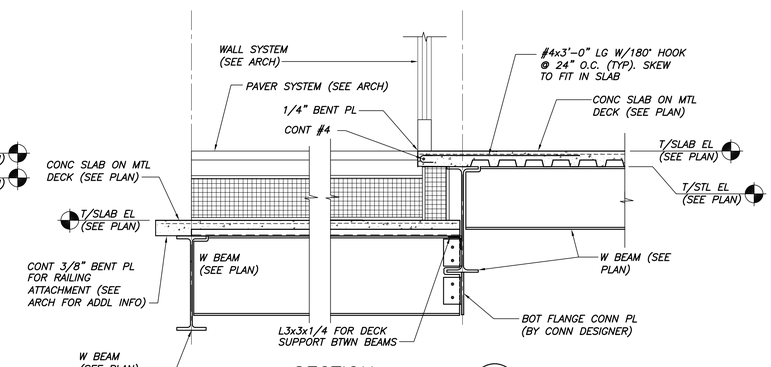

SECTION 3
3/4"=1'-0" S1.3

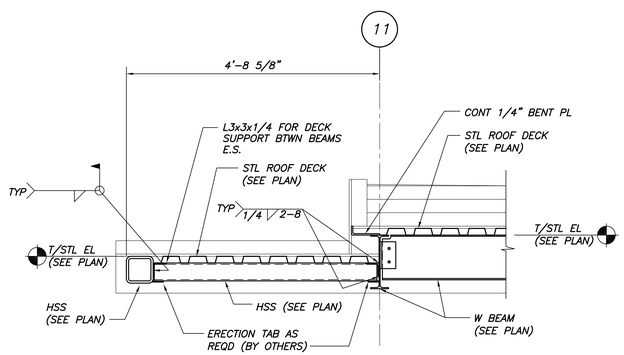

SECTION 4
3/4"=1'-0" S1.3

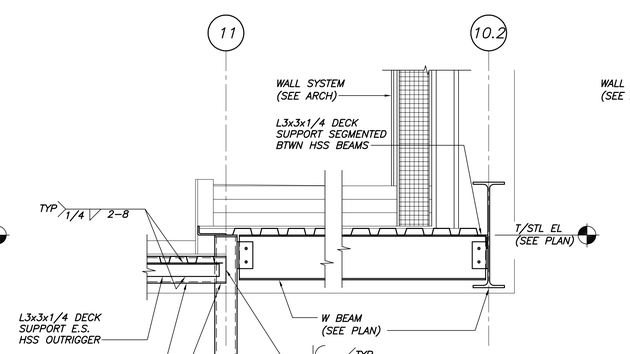

SECTION 5
3/4"=1'-0" S1.3

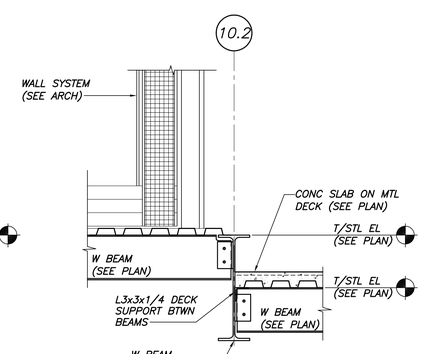

SECTION 6
3/4"=1'-0" S1.3

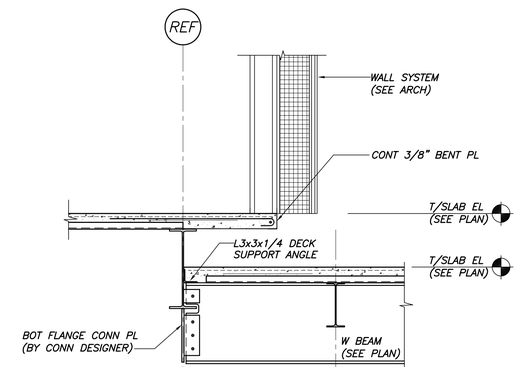

SECTION 7
3/4"=1'-0" S1.3

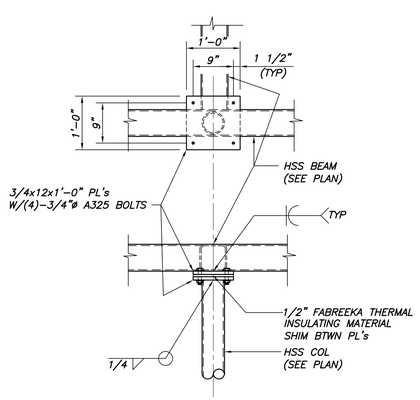

SECTION 8
3/4"=1'-0" S1.3

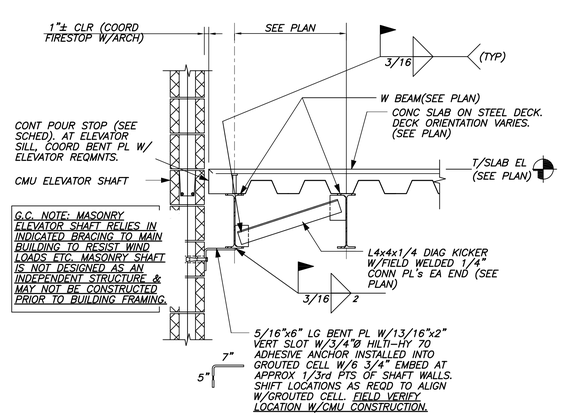

TYP ELEVATOR SHAFTWALL BRACING DETAIL
N.T.S.

scott simons architects
designed for human potential
75 York Street
Portland, Maine 04101
slmonsarchitects.com
207.772.4656

BECKER STRUCTURAL ENGINEERS
75 York Street, Portland, Maine 04101
207.879.1838 ▪ beckerstructural.com

PROJECT NAME:

WAYNFLETE LOWER SCHOOL
ADDITION & RENOVATIONS

WAYNFLETE SCHOOL
360 SPRING STREET
PORTLAND, MAINE 04102

SEAL:

STATE OF MAINE
DANIEL G. BURNE
No. 10910
LICENSED
PROFESSIONAL ENGINEER

THIS DRAWING IS THE PROPERTY OF SCOTT SIMONS ARCHITECTS (SSA) AND IS NOT TO BE COPIED OR REPRODUCED IN PART OR WHOLE.
2012 © SCOTT SIMONS ARCHITECTS, LLC

REVISION:

DATE OF ISSUE:	12 JANUARY 2017
PROJECT NUMBER:	3660
STATUS:	ISSUED FOR BID

FRAMING SECTIONS & DETAILS

S3.3

2015 © Scott Simons Architects,LLC