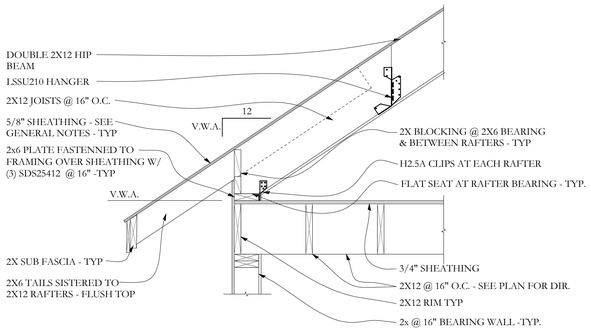

SECTION G/S2.1 3/4"=1'-0

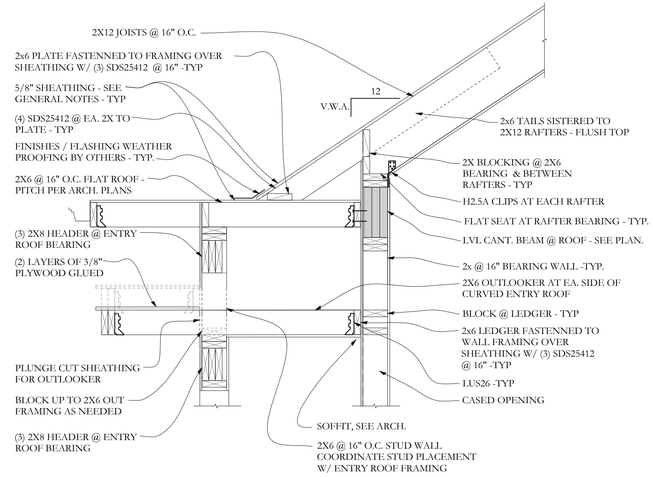

SECTION H/S2.1 3/4"=1'-0

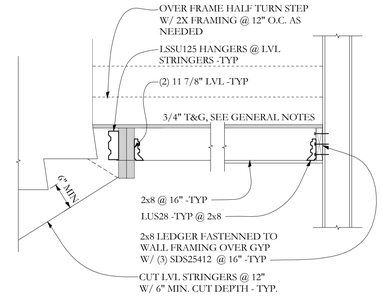

SECTION J/S2.1 3/4"=1'-0

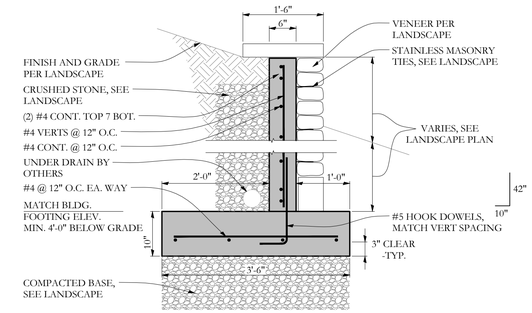

SECTION K/S2.1 3/4"=1'-0

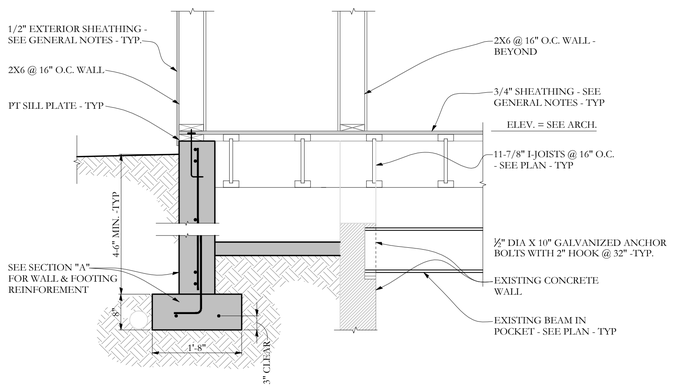

SECTION D/S2.1 3/4"=1'-0

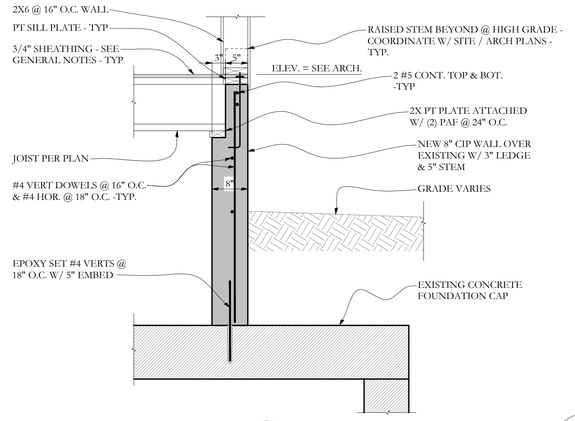

SECTION E/S2.1 3/4"=1'-0

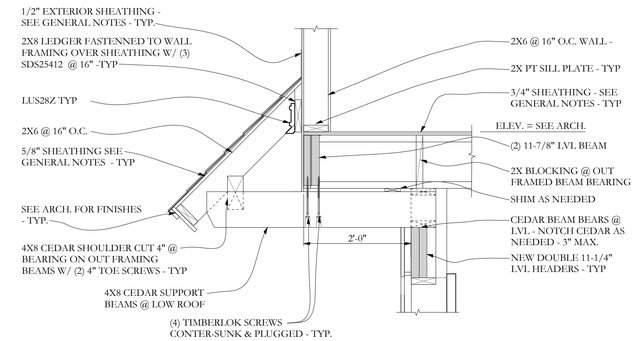

SECTION F/S2.1 3/4"=1'-0

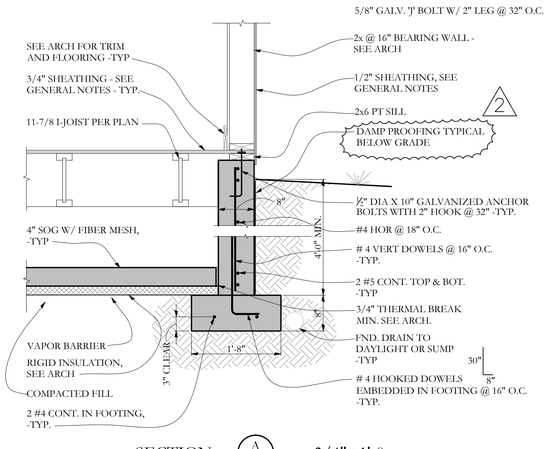

SECTION A/S2.1 3/4"=1'-0

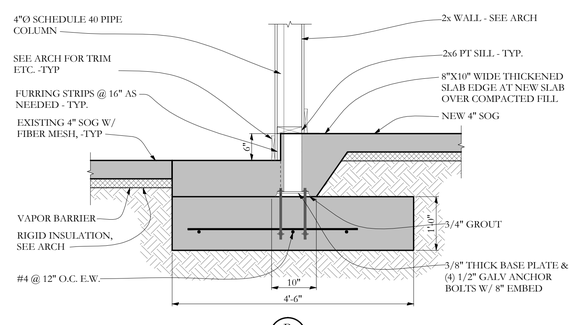

SECTION B/S2.1 3/4"=1'-0

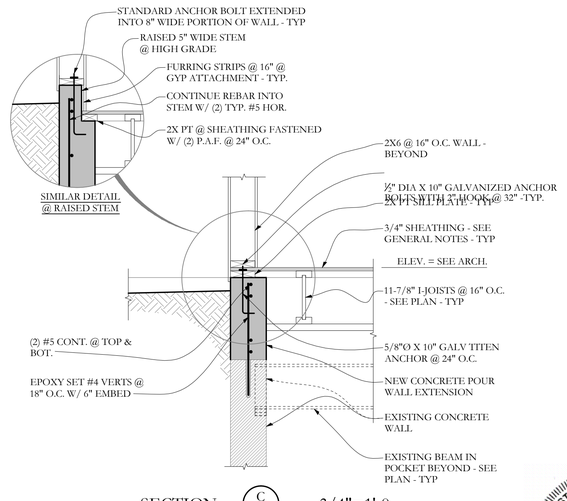

SECTION C/S2.1 3/4"=1'-0

STATE OF MAINE
AARON C. JONES
No. 10968
LICENSED
PROFESSIONAL ENGINEER
02/20/15

Structural Integrity
Consulting Engineers, Inc.
77 Oak Street
Portland, ME, 04101
p. 207-774-4644
f. 866-793-7835
www.structuralintegr.com

BUILD WITH CONFIDENCE

©2014 Structural Integrity Consulting Engineers, Inc.

SI# 14-0225

M A R K
M U E L L E R
ARCHITECTS
A.I.A.
100 Commercial Street
Suite 205
Portland, Maine 04101
Phone: 207.774.9057
Fax: 207.773.3851
Email:
mark@muellerarchitects.com

©COPYRIGHT
MUELLER ARCHITECTS, LLC

ANSEL RESIDENCE

11 ORCHARD STREET
PORTLAND, MAINE

RENOVATIONS OF:

SECTIONS/DETAILS

REVISIONS	FOR
1 - Feb. 20th, 2015	FOR PRICING
2 - May 28th, 2015	CITY REVIEW COMMENTS

DATE
Jan. 28th, 2015
PROJECT
ANSEL RESIDENCE
DRAWN BY
WMc
CHECK BY
ACJ

S2.1