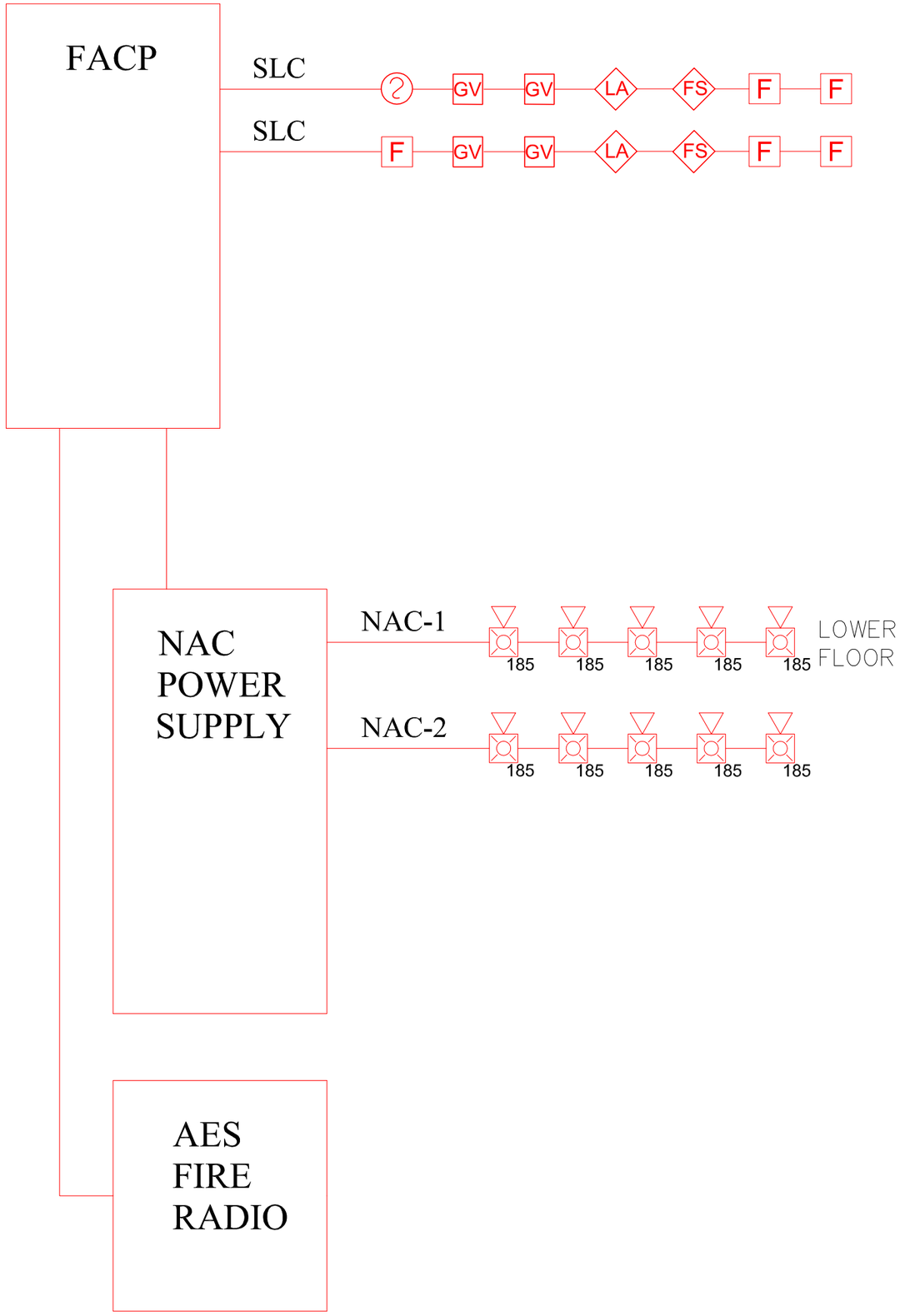

LEGEND

110	HORN/STROBE (CANDELA RATING)
?	PHOTOELECTRIC SMOKE DETECTOR
F	MANUAL PULL STATION
FS	SPRINKLER WATERFLOW
GV	SPRINKLER GATE VALVE TAMPER
LA	SPRINKLER LOW AIR PRESSURE

John Kimball NICET Certified Senior Engineering Technician
Certification # 107989
securadyne systems
6500 Research Drive
NE Reg Manager, MA 01887
Wilmington, MA 01887
Fax: 978-658-4444
In State: 978-658-4444
NE Reg Portland, ME Office
Portland, Maine 04103
Fax: 978-658-4444
In State: 207-828-0022

NO	REVISIONS	DATE	BY
0			

PROJECT TITLE
NEW YARD LLC
528 COMMERCIAL ST
PORTLAND MAINE

SCALE	N.T.S.
DRAWN	SURV-JK
DATE	11-21-13

© SECURADYNE SYSTEMS

SHEET TITLE
ALARM SYSTEM RISER PLAN

SHEET NUMBER
RISER