PROJECT: PORTLAND YACHT – NEW YARD
SUBJECT: LEGACY BUILDING FOUNDATION
ITEM: 1–line & 9–line Footings

GAGNON ENGINEERING INC.
Structural Consultants

DATE: 10/7/13
BY: RG
SHEET: 3 OF 9999
gei #205

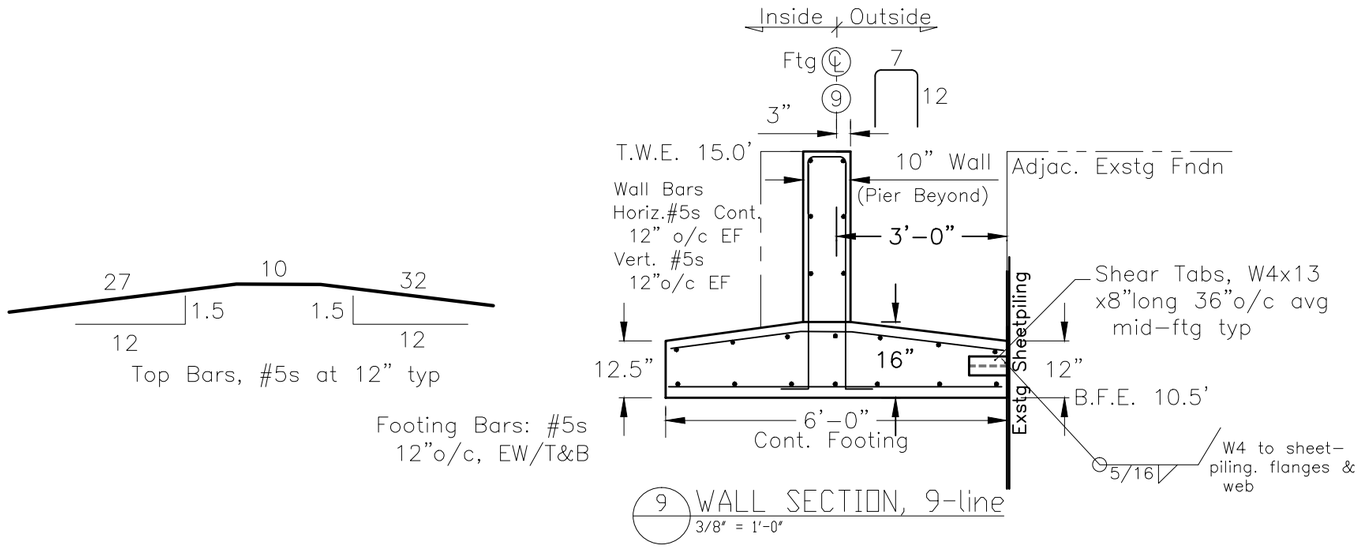


9 WALL SECTION, 9-line
3/8" = 1'-0"

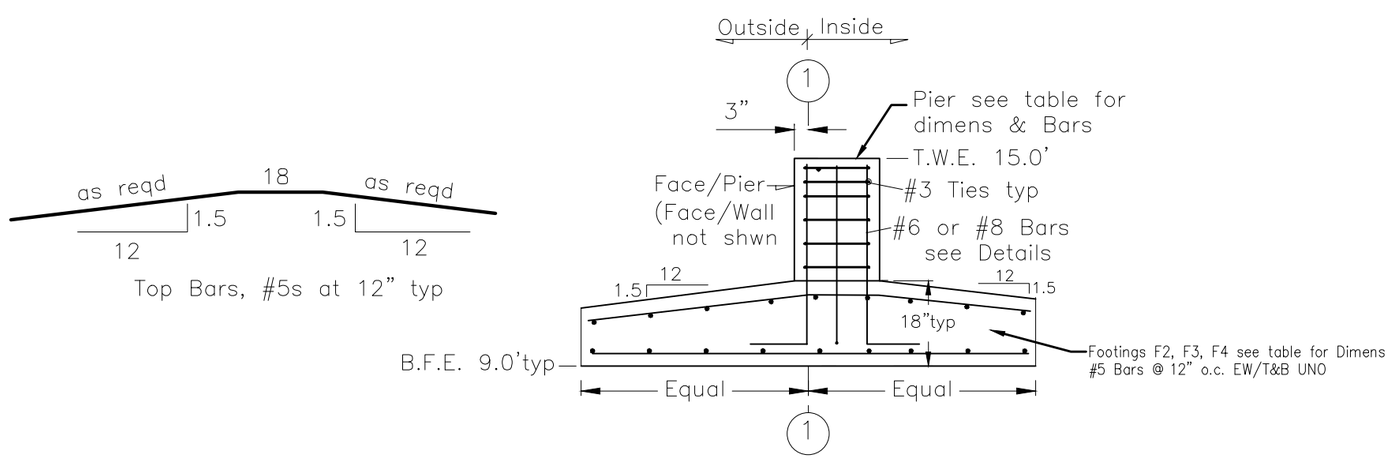


1 PIER SECTION, 1-line
3/8" = 1'-0"
(Walls Not Shown)

STATE OF MAINE
ROGER R. GAGNON
No. 3409
LICENSED
PROFESSIONAL ENGINEER