Custom Float Services, Inc.

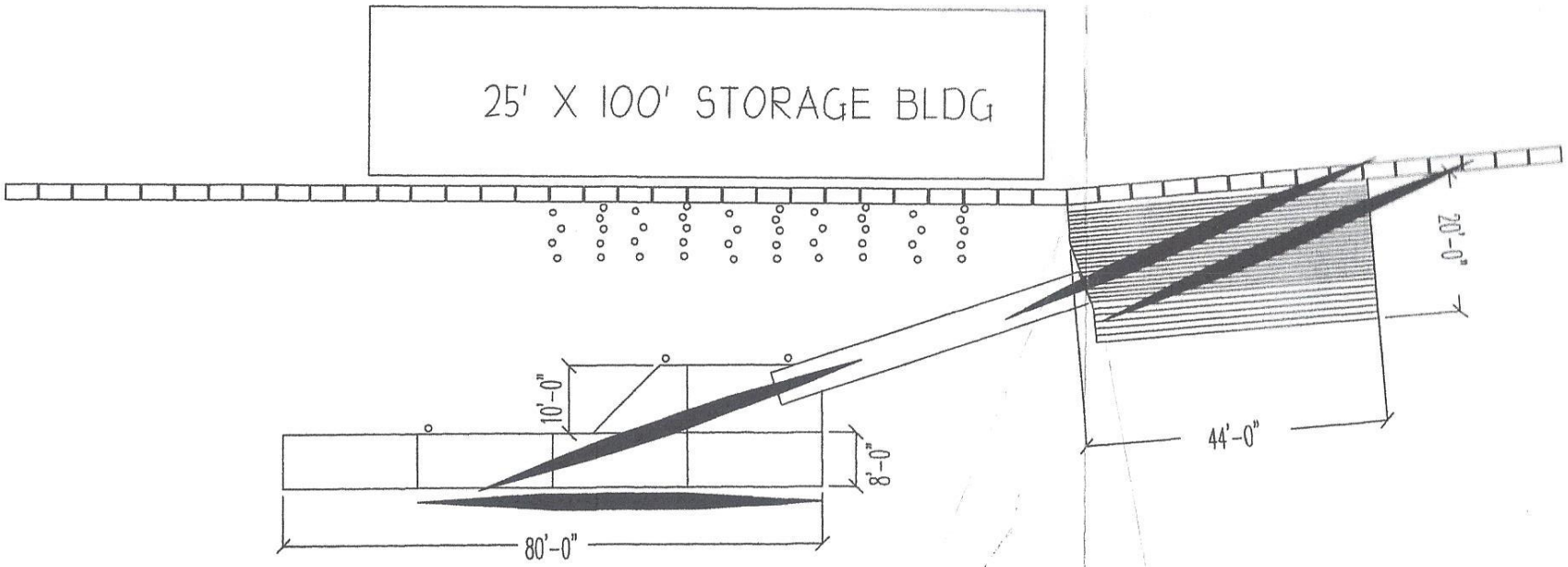

Reviewed for Code Compliance
Inspections Division
Approved with Conditions
Date: 09/20/16
CITY OF PORTLAND, MAINE