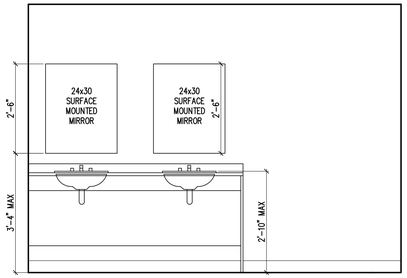

A | BATHROOM ELEVATIONS
SCALE: 1/2"=1'-0"

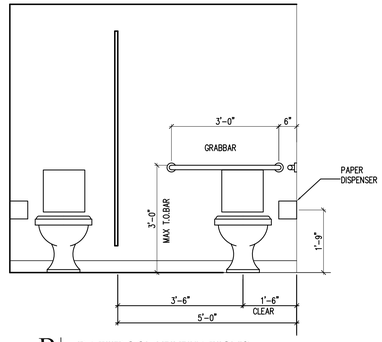

B | BATHROOM ELEVATIONS
SCALE: 1/2"=1'-0"

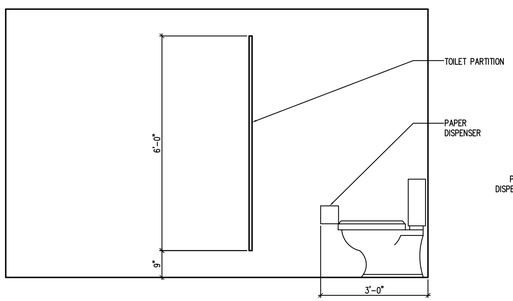

C | BATHROOM ELEVATIONS
SCALE: 1/2"=1'-0"

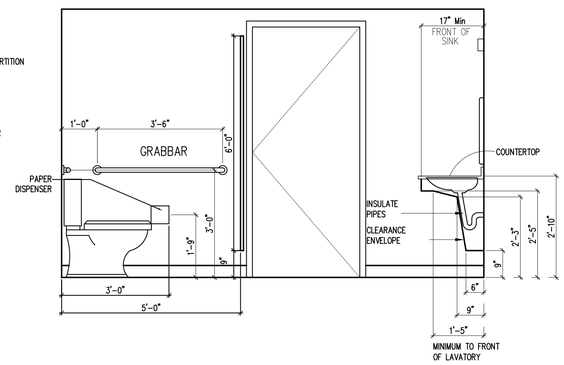

D | BATHROOM ELEVATIONS
SCALE: 1/2"=1'-0"

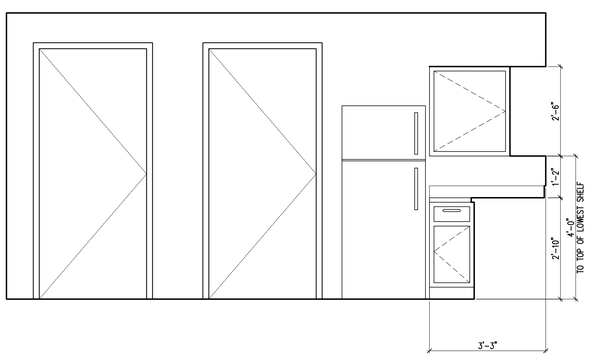

E | BREAKROOM ELEVATIONS
SCALE: 1/2"=1'-0"

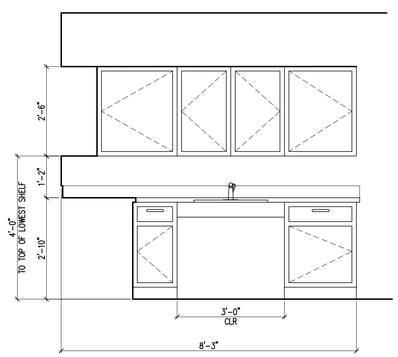

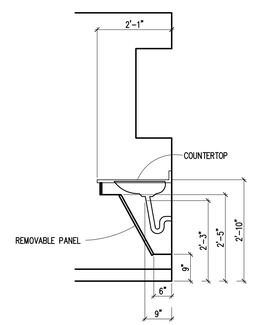

F | BREAKROOM ELEVATIONS
SCALE: 1/2"=1'-0"

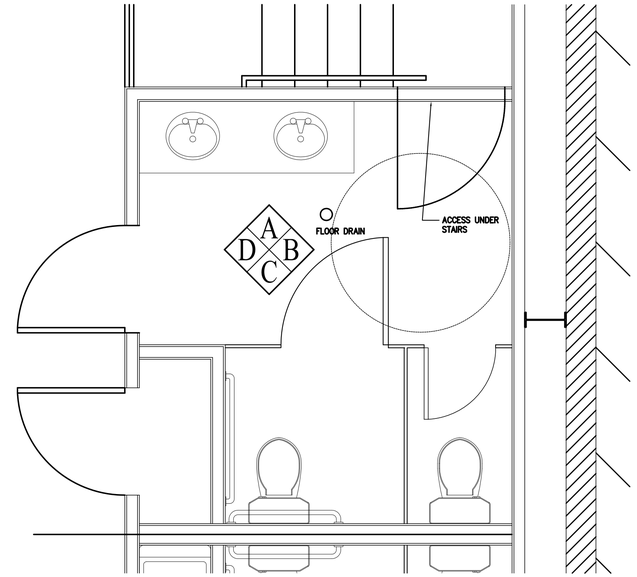

2 | BATHROOM PLAN
SCALE: 1/2"=1'-0"

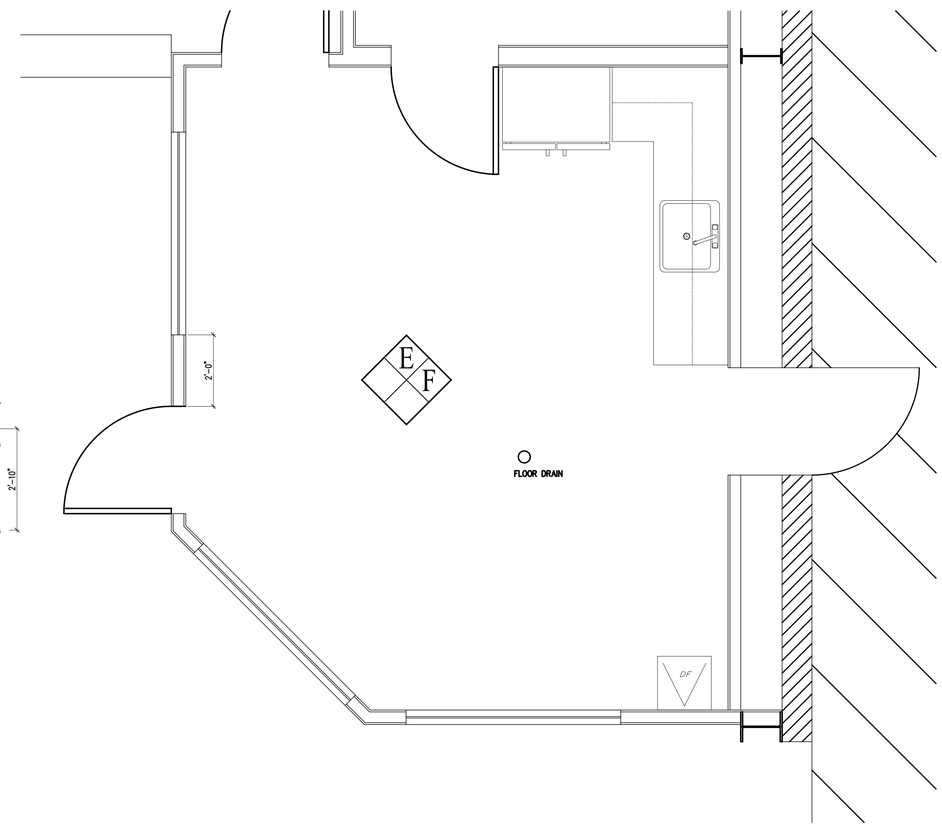

1 | BREAKROOM PLAN
SCALE: 1/2"=1'-0"

LICENSED ARCHITECT
DAVID LLOYD
NO. 936
STATE OF MAINE

Prepared For:
Canal Landing / New Yard LLC
100 West Commercial St. Portland, ME

Consulting Engineer:

Architect:
ARCHETYPE architects
48 Union Wharf Portland, Maine 04101
(207) 772-6022 Fax (207) 772-4056

Project:
Canal Landing / New Yard
100 West Commercial St. Portland, ME

Revisions:

Scale: AS NOTED

Date: 25 September 2014

INTERIOR ELEVATIONS

A4.01