# 108 Salem Street.
# Supplemental Information

Reviewed for Code Compliance
Inspections Division
Approved with Conditions

Date: 11/08/13

Oct 20, 2013


UL Design L501.....pages 2-7
GreenFiber Data Sheet.....pages 8-9
Firestop Data sheet.....pages 10-14
IRC Section 302.3.....page 15

Reviewed for Code Compliance
Inspections Division
Approved with Conditions

Date: 11/08/13

# FLOOR-CEILING SYSTEMS, WOOD-FRAMED

| GA FILE NO. FC 5420 | GENERIC | 1 HOUR FIRE | 35 to 39 STC SOUND |
|---|---|---|---|

## WOOD JOISTS, GYPSUM WALLBOARD

One layer 5/8" type X gypsum wallboard or gypsum veneer base applied at right angles to 2 x 10 wood joists 16" o.c. with 6d coated nails, 1 7/8" long, 0.0915 shank, 1/4" heads, 6" o.c. Wood joists supporting 1" nominal wood subfloor and 1" nominal wood finish floor, or 19/32" plywood finished floor with long edges T & G and 15/32" interior plywood with exterior glue subfloor perpendicular to joists with joints staggered.

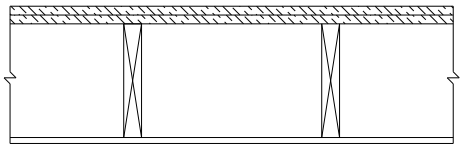

| | |
|---|---|
| Approx. Ceiling Weight: | 2.5 psf |
| Fire Test: | UL R3501-5, 7-15-52;<br>UL R1319-2, 3, 6-5-52;<br>ULC Design M500 |
| Sound Test: | See FC 5410<br>(NGC 4024, 7-13-66) |
| IIC & Test: | 32 (66 C & P)<br>NGC 5032, 7-19-66 |

Reviewed for Code Compliance
Inspections Division
Approved with Conditions

Date: 11/08/13

Fire-resistance Ratings - ANSI/UL 263

See General Information for Fire-resistance Ratings - ANSI/UL 263

September 30, 2013

**Unrestrained Assembly Rating — 1 Hr.**
**Finish Rating — (See Item 5 and 5A)**
**Load Restricted for Canadian Applications — See Guide BXUV7**

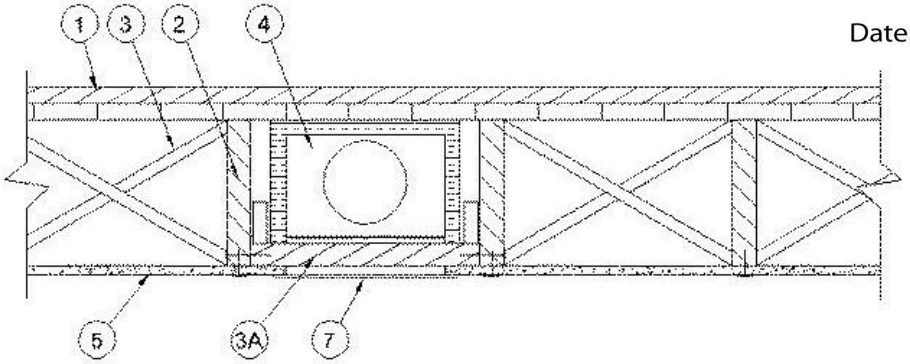


1. **Flooring Systems —** The flooring system shall consist of one of the following:

**System No. 1**

**Subflooring —** Min 1 by 6 in. T & G lumber fastened diagonally to joists, or min 15/32 in. thick plywood or min 7/16 in. thick oriented strand board (OSB) wood structural panels, min grade "C-D" or "Sheathing". Face grain of plywood or strength axis of panel to be perpendicular to joists with joints staggered.

**Vapor Barrier —** Nom 0.010 in. thick commercial rosin-sized building paper.

**Finish Flooring —** Min 1 by 4 in. T & G lumber installed perpendicular to joists, or min 19/32 in. thick wood structural panels, min grade "Underlayment" or "Single-Floor". Face grain of plywood or strength axis of panels to be perpendicular to joists with joints staggered.

**System No. 2**

**Subflooring —** Min 15/32 in. thick wood structural panels, min grade "C-D" or "Sheathing". Face grain of plywood or strength axis of panels to be perpendicular to the joists with joints staggered.

**Vapor Barrier — (Optional) —** Nom 0.030 in. thick commercial asphalt saturated felt.

**Floor Mat Materials*** (Optional) - Floor mat material nom 1/16 in. loose laid over the subfloor. Refer to manufacturer's instructions regarding the minimum thickness of floor topping over each floor mat material.

**UNITED STATES GYPSUM CO —** Types SAM, LEVELROCK® Brand Sound Reduction Board, LEVELROCK® Brand Floor Underlayment SRM-25

**Alternate Floor Mat Materials* —** (Optional) — Nom 3/8 in. thick floor mat material loose laid over the subfloor. Floor topping thickness shall be as specified under**Floor Topping Mixture.**
**GRASSWORX L L C —** Type SC50

**Finish Flooring - Floor Topping Mixture* —** Min 3/4 having a min compressive strength of 1800 psi. Refer to manufacturer's instructions accompanying the material for specific mix design.
**UNITED STATES GYPSUM CO —** Type CSD, LRK, HSLRK

**System No. 3**

**Subflooring —** Min 19/32 in. thick wood structural panels, min grade "C-D" or "Sheathing". Face grain of plywood or strength axis of panel to be perpendicular to joists with joints staggered.

**Floor Mat Materials* — (Optional) —** Floor mat material nom 5/64 in. (2 mm) thick adhered to subfloor with Hacker Floor Primer. Primer to be applied to the surface of the mat prior to the placement of floor-topping mixture. Floor topping thickness a min 1 in. over the floor mat.

**HACKER INDUSTRIES INC —** Type Hacker Sound-Mat.

**Alternate Floor Mat Materials - (Optional) —**Floor mat material nom 1/4 in. (6mm) thick adhered to subfloor with Hacker Floor Primer. Primer to be applied to the surface of the mat prior to the placement of a min 1-1/4 in. (32mm) of floor-topping mixture.

**HACKER INDUSTRIES INC —** Type Hacker Sound-Mat II.

**Alternate Floor Mat Materials - (Optional) —** Floor mat material nom 1/8 in. (3mm) thick loose laid over the subfloor. Floor topping thickness shall be a min of 3/4 in. (19mm)

**HACKER INDUSTRIES INC —** FIRM-FILL SCM 125

**Alternate Floor Mat Materials - (Optional) —** Floor mat material nom 1/4 in. (6mm) thick loose laid over the subfloor. Floor topping thickness shall be a min of 1 in. (25mm)

**HACKER INDUSTRIES INC —** Type FIRM-FILL SCM 250, Quiet Qurl 55/025

**Alternate Floor Mat Materials - (Optional) —** Floor mat material nom 3/8 in. (10mm) thick loose laid over the subfloor. Floor topping thickness shall be a min of 1-1/4 in. (32mm)

**HACKER INDUSTRIES INC —** FIRM-FILL SCM 400, Quiet Qurl 60/040

**Alternate Floor Mat Materials - (Optional) —** Floor mat material nom 3/4 in. (19mm) thick loose laid over the subfloor. Floor topping thickness shall be a min of 1-1/2 in. (38mm)

**HACKER INDUSTRIES INC —** Type FIRM-FILL SCM 750, Quiet Qurl 65/075

**Metal Lath (Optional) —** For use with 3/8 in. (10 mm) floor mat materials, 3/8 in. expanded steel diamond mesh, 3.4 lbs/sq yd placed over the floor mat material. Hacker Floor Primer to be applied prior to the placement of the metal lath. When metal lath is used, floor topping thickness a nom 1-1/4 in. over the floor mat.

**Finish Flooring - Floor Topping Mixture* —** Min 3/4 in. thickness of floor topping mixture having a min compressive strength of 1100 psi. Mixture shall consist of 6.8 gal of water to 80 lbs of floor topping mixture to 1.9 cu ft of sand.

**HACKER INDUSTRIES INC —** Firm-Fill Gypsum Concrete, Firm-Fill 2010, Firm-Fill 3310, Firm-Fill 4010, Firm-Fill High Strength, Gyp-Span Radiant

**System No. 4**

RESURGAM CITY OF PORTLAND, MAINE
Reviewed for Code Compliance
Inspections Division
Approved with Conditions
Date: 11/08/13

**Subflooring —** Min 15/32 in. thick wood structural panels, min grade "C-D" or "Sheathing". Face grain of plywood or strength axis o joists with joints staggered.

**Vapor Barrier - (Optional) —** Nom 0.030 in thick commercial asphalt saturated felt.

**Finish Flooring - Floor Topping Mixture* —** Min 1-1/2 in. thickness of floor topping mixture having a min compressive strength of 1 plus or minus 5 pcf. Foam concentrate mixed 40:1 by volume with water and expanded at 100 psi through nozzle. Mixture shall co foam concentrate to 94 lbs Type I Portland cement, 300 lbs of sand with 5-1/2 gal of water.

**ELASTIZELL CORP OF AMERICA —** Type FF

**System No. 5**

**Subflooring —** Min 15/32 in. thick wood structural panels, min grade "C-D" or "Sheathing". Face grain of plywood or strength axis o joists with joints staggered.

**Vapor Barrier — (Optional) —** Nom 0.030 in thick commercial asphalt saturated felt.

**Finish Flooring - Floor Topping Mixture* —** Min 1-1/2 in. thickness of floor topping mixture having a min compressive strength of 1 plus or minus 5 pcf. Foam concentrate mixed 40:1 by volume with water and expanded at 100 psi through nozzle. Mixture shall consist of 1.2 cu feet of preformed foam concentrate to 94 lbs Type I Portland cement, 300 lbs of sand with 5-1/2 gal of water.

**CELLULAR CONCRETE L L C —** Floor Topping Mixture

**System No. 6**

**Subflooring —** Min 15/32 in. thick wood structural panels, min grade "C-D" or "Sheathing". Face grain of plywood or strength axis of panel to be perpendicular to joists with joints staggered.

**Vapor Barrier - (Optional) —** Nom 0.030 in thick commercial asphalt saturated felt.

**Finish Flooring - Floor Topping Mixture* —** Min 1-1/2 in. thickness of floor topping mixture having a min compressive strength of 1000 psi and a cast density of 100 plus or minus 5 pcf. Foam concentrate mixed 40:1 by volume with water and expanded at 100 psi through nozzle. Mixture shall consist of 1.4 cu feet of preformed foam concentrate to 94 lbs Type I Portland cement, 62.5 lbs of Pea Gravel, 312.5 lbs of sand with 5-1/2 gal of water.

**LITE-CRETE INC —** Type I

**System No. 7**

**Subflooring —** Min 15/32 in. thick wood structural panels, min grade "C-D" or "Sheathing". Face grain of plywood or strength axis of panel to be perpendicular to joists with joints staggered.

**Finish Flooring - Floor Topping Mixture* —** Min 3/4 or 1 in. thickness of floor topping mixture for 19/32 or 15/32 in. thick wood structural panels respectively, having a min compressive strength of 1000 psi. Mixture shall consist of 5 to 8 gal of water to 80 lbs of floor topping mixture to 2.1 cu ft of sand.

**ULTRA QUIET FLOORS —** UQF-A, UQF-Super Blend, UQF-Plus 200

**System No. 8**

**Subflooring —** Min 15/32 in. wood structural panels, min grade "C-D" or "Sheathing". Face grain of plywood or strength axis of panels to be perpendicular to joists with joints staggered.

**Vapor Barrier - (Optional) —** Nom 0.030 in thick commercial asphalt saturated felt.

**Floor Mat Materials* - (Optional) —** Nom 1/4 in. thick floor mat material loose laid over the subfloor. Maxxon Floor Primer to be applied to the surface of the mat prior to the floor topping placement. When floor mat material is used, min thickness of floor topping thickness is 1 in. Floor topping thickness a min 3/4 in. over Acousti-Mat I floor mat.

**MAXXON CORP —** Type Acousti-Mat I, Acousti-Mat II, Acousti-Mat II HP.

**Alternate Floor Mat Materials* -** (Optional) **—** Nom 0.8 in. thick floor mat material loose laid over the subfloor with Crack Suppression Mat (CSM) loose laid over the floor mat material. Floor topping thickness shall be min 1-1/2 in.

**MAXXON CORP —** Type Acousti-Mat 3, Acousti-Mat 3 HP, Crack Suppression Mat (CSM)

**Metal Lath** (Alternate to Crack Suppression Mat (CSM)) **—** 3/8 in. expanded galvanized steel diamond mesh, 3.4 lbs/sq yd loose laid over the floor mat material. Floor topping thickness shall be min 1-1/2 in.

**Alternate Floor Mat Materials* -** (Optional) **—** Nom 0.4 in. thick floor mat material loose laid over the subfloor. Maxxon Floor Primer to be applied to the surface of the mat prior to the floor topping placement. Floor topping thickness shall be min 1-1/2 in.

**MAXXON CORP —** Type Enkasonic 9110, Enkasonic 9110 HP.

**Alternate Floor Mat Materials* -** (Optional) **—** Nom 0.2 in. thick floor mat material loose laid over the subfloor. Maxxon Floor Primer may be applied to the surface of the mat prior to the floor topping placement. Floor topping thickness shall be min 3/4 in. (1 in. for min 15/32 in. thick wood structural panels).

**MAXXON CORP —** Type Acousti-Mat LP-R

**Metal Lath** (Optional) **—** For use with floor mat materials, 3/8 in. expanded galvanized steel diamond mesh, 3.4 lbs/sq yd or Maxxon Corp. UL Classified Crack Suppression Mat (CSM) loose laid over the floor mat material. Floor topping thickness shall be min 1 in.

**MAXXON CORP —** Type Crack Suppression Mat (CSM)

**Finish Flooring - Floor Topping Mixture* —** Min 3/4 or 1 in. thickness of floor topping mixture for min 19/32 or min 15/32 in. thick wood structural panels respectively, having a min compressive strength of 1000 psi. Mixture shall consist of 3 to 7 gal of water to 80 lbs of floor topping mixture to 1.0 to 2.1 cu ft of sand.

**MAXXON CORP —** Type D-C, GC, GC2000, L-R, T-F, CT

**System No. 9**

**Subflooring —** Min 15/32 in. thick wood structural panels, min grade "C-D" or "Sheathing". Face grain of plywood or strength axis of panel to be perpendicular to joists with joints staggered.

**Vapor Barrier - (Optional) —** Nom 0.030 in thick commercial asphalt saturated felt.

**Floor Mat Materials* - (Optional) —** Nom 1/4 in. thick floor mat material loose laid over the subfloor. Maxxon Floor Primer to be applied to the surface of the mat prior to the floor topping placement. When floor mat material is used, min thickness of floor topping mixture is 1 in. Floor topping thickness a min 3/4 in. over Acousti-Mat I floor mat.

**MAXXON CORP —** Type Acousti-Mat I, Acousti-Mat II, Acousti-Mat II HP.

**Alternate Floor Mat Materials* -** (Optional) **—** Nom 0.8 in. thick floor mat material loose laid over the subfloor with Crack Suppression Mat (CSM) loose laid over the floor mat material. Floor topping thickness shall be min 1-1/2 in.

**MAXXON CORP —** Type Acousti-Mat 3, Acousti-Mat 3 HP, Crack Suppression Mat (CSM)

**Metal Lath** (Alternate to Crack Suppression Mat (CSM)) **—** 3/8 in. expanded galvanized steel diamond mesh, 3.4 lbs/sq yd loose laid over the floor mat material. Floor topping thickness shall be min 1-1/2 in.

**Alternate Floor Mat Materials* -** (Optional) **—** Nom 0.4 in. thick floor mat material loose laid over the subfloor. Maxxon Floor Primer to be applied to the surface of the mat prior to the floor topping placement. Floor topping thickness shall be min 1-1/2 in.

RESURGAM CITY OF PORTLAND, MAINE
Reviewed for Code Compliance
Inspections Division
Approved with Conditions
Date: 11/08/13

**MAXXON CORP —** Type Enkasonic 9110, Enkasonic 9110 HP.

**Alternate Floor Mat Materials* -** (Optional) **—** Nom 0.2 in. thick floor mat material loose laid over the subfloor. Maxxon Floor Prim of the mat prior to the floor topping placement. Floor topping thickness shall be min 3/4 in. (1 in. for min 15/32 in. thick wood stru

**MAXXON CORP —** Type Acousti-Mat LP-R

**Metal Lath** (Optional) **—** For use with floor mat materials, 3/8 in. expanded galvanized steel diamond mesh, 3.4 lbs/sq yd or Maxx Suppression Mat (CSM) loose laid over the floor mat material. Floor topping thickness shall be min 1 in.

**MAXXON CORP —** Type Crack Suppression Mat (CSM)

**Finish Flooring - Floor Topping Mixture* —** Min 3/4 or 1 in. thickness of floor topping mixture for min 19/32 or min 15/32 in. thick having a min compressive strength of 1200 psi. Mixture shall consist of 4 to 7 gal of water to 80 lbs of floor topping mixture to 1.4

**RAPID FLOOR SYSTEMS —** Type RF, RFP, RFU, RFR, Ortecrete

**System No. 10**

**Subflooring —** Min 1 by 6 in. T & G lumber fastened diagonally to joists, or min 15/32 in. thick plywood or min 7/16 in. thick oriented strand board (OSB) wood structural panels, min grade "C-D" or "Sheathing". Face grain of plywood or strength axis of panels to be perpendicular to the joists with joints staggered.

**Finish Floor - Mineral and Fiber Board* —** Min 1/2 in. thick, supplied in sizes ranging from 3 ft by 4 ft to 8 ft by 12 ft. All joints to be staggered a min of 12 in. with adjacent sub-floor joints.

**HOMASOTE CO —** Type 440-32 Mineral and Fiber Board

**System No. 11**

**Subflooring —** Min 15/32 in. thick wood structural panels, min grade "C-D" or "Sheathing". Face grain of plywood or strength axis of panels to be perpendicular to the joists with joints staggered.

**Vapor Barrier - (Optional) —** Nom 0.030 in. thick commercial asphalt saturated felt.

**Finish Flooring - Floor Topping Mixture* —** Min 3/4 or 1 in. thickness of floor topping mixture for 19/32 or 15/32 in. thick wood structural panels respectively, having a min compressive strength of 1000 psi. Refer to manufacturer's instructions accompanying the material for specific mix design.

**ALLIED CUSTOM GYPSUM PLASTERWORKS L L C —** Accu-Crete, AccuRadiant, AccuLevel G40 and AccuLevel SD30.

**Alternate Floor Mat Material* -** (Optional) **-** Floor mat material nominal 2 - 9.5 mm thick loose laid over the subfloor. Floor topping shall be a min of 3/4 in. or 1 in. thick for 19/32 or 15/32 in. thick wood structural panels respecitively.

**ALLIED CUSTOM GYPSUM PLASTERWORKS L L C —** Type AccuQuiet P80, Type AccuQuiet C40, AccuQuiet D13, Type AccuQuiet RSM 20, Type AccuQuiet RSM 32, Type AccuQuiet RSM 48, Type AccuQuiet RSM 64, Type AccuQuiet RSM 120, and Type AccuQuiet D-18.

**System No. 12**

**Subflooring —** 15/32 or 19/32 in. thick wood structural panels, min. grade "C-D" or "Sheathing". Face grain of plywood or strength axis of panels to be perpendicular to joists with joints staggered.

**Vapor Barrier — (Optional) —** Nom 0.030 in. thick commercial asphalt saturated felt.

**Finish Flooring — Floor Topping Mixture* —** Min 3/4 or 1 in. thickness of floor topping mixture for 19/32 or 15/32 in. thick wood structural panels respectively, having a min compressive strength of 2100 psi. Refer to manufacturer's instructions accompanying the material for specific mix design.

**BMI PRODUCTS OF NORTHERN ILLINOIS INC —** Maxit 493

**System No. 13**

**Subflooring —** Min 15/32 in. thick wood structural panels, min grade "C-D" or "Sheathing". Face grain of plywood or strength axis of panels to be perpendicular to the joists with joints staggered.

**Vapor Barrier —** (Optional) **-** Commercial asphalt saturated felt, 0.030 in. thick.

**Vapor Barrier —** (Optional) **-** Nom 0.010 in. thick commercial rosin-sized building paper.

**Finish Flooring* —** Min 3/4 in. thickness of any Floor Topping Mixture bearing the UL Classification Marking as to Fire Resistance. See Floor- and Roof-Topping Mixtures (CCOX) category for names of Classified Companies.

**Floor Mat Materials* —** (Optional) **-** Nom. 1/4 in. thick loose laid over the subfloor. Floor topping thickness shall be a minimum of 3/4 in.

**KEENE BUILDING PRODUCTS CO INC —** Type Quiet Qurl 55/025 and Quiet Qurl 55/025 N

**Alternate Floor Mat Materials* —** (Optional) **-** Floor mat material Nom. 3/8 in. thick loose laid over the subfloor. Floor topping thickness shall be a minimum of 1 in.

**KEENE BUILDING PRODUCTS CO INC —** Type Quiet Qurl 60/040 and Quiet Qurl 60/040 N

**Alternate Floor Mat Materials* —** (Optional) **-** Floor mat material Nom. 3/4 in. thick loose laid over the subfloor. Floor topping thickness shall be a minimum of 1-1/2 in.

**KEENE BUILDING PRODUCTS CO INC —** Type Quiet Qurl 65/075, Quiet Qurl 65/075 N

**Alternate Floor Mat Materials* —** (Optional) **-** Floor mat material Nom. 1/8 in. thick loose laid over the subfloor. Floor topping thickness shall be a minimum of 3/4 in.

**KEENE BUILDING PRODUCTS CO INC —** Type Quiet Qurl 52/013 and Quiet Qurl 52/013 N

**Alternate Floor Mat Materials* —** (Optional) **-** Floor mat material Nom. ⅛ in. entangled net core with a compressible fabric attached to the bottom loose laid over the subfloor. Floor topping thickness shall be a minimum of 1 in.

**KEENE BUILDING PRODUCTS CO INC —** Quiet Qurl 55/025 MT and Quiet Qurl 55/025 N MT

**System No. 14**

**Subflooring —** Min 23/32 in. thick T&G wood structural panels, min grade "Underlayment" or "Single-Floor". Face grain of plywood or strength axis of panels to be perpendicular to the trusses with end joints staggered 4 ft. Panels secured to trusses with construction adhesive and No. 6d ringed shank nails spaced 12 in. OC along each truss. Staples having equal or greater withdrawal and lateral resistance strength may be substituted for the 6d nails.

**Gypsum Board* —** One layer of nom 5/8 in. thick, 4 ft wide gypsum board, installed with long dimension perpendicular to joists. Gypsum board secured with 1 in. long No. 6 Type W bugle head steel screws spaced 12 in. OC and located a min of 1-1/2 in. from side and end joints. The joints of the gypsum board are to be staggered a minimum of 12 inches from the joints of the subfloor.

**GEORGIA-PACIFIC GYPSUM L L C —** Type DS

**Floor Mat Materials* —** (As an alternate to the single layer gypsum board) **-** Floor mat material loose laid over the subfloor.

**MAXXON CORP —** Type Acousti-Mat I, Acousti-Mat II, Acousti-Mat II HP, Acousti-Mat 3, Acousti-Mat 3 HP, Enkasonic 9110, Enkasonic 9110 HP, Acousti-Mat LP-R.

**Gypsum Board* —** (For use when floor mat is used) Two layers of nom 5/8 in. thick, 4 ft wide gypsum board, installed with long dimension perpendicular to joists on

top of the floor mat material. Gypsum board secured to each other with 1 in. long No. 6 Type G bugle head steel screws spaced 12 in. from side and end joints. The joints of the gypsum board are to be staggered a minimum of 12 inches in between layers and f

**GEORGIA-PACIFIC GYPSUM L L C —** Type DS

Reviewed for Code Compliance
Inspections Division
Approved with Conditions

Date: 11/08/13

**System No. 15**

**Subflooring —** Min 15/32 in. thick wood structural panels, min grade "C-D" or "Sheathing". Face grain of plywood or strength axis o joists with joints staggered.

**Finish Flooring - Floor Topping Mixture* —** Min 3/4 in. thickness of floor topping mixture for min 15/32 in. thick wood structural pa strength of 2150 psi. Refer to manufacturer's instructions accompanying the material for specific mix design.

**MAPEI CORP —** Type Planitex SL 35

**System No. 16**

**Subflooring —** Min. 15/32 in. thick wood structural panels, min. grade "C-D" or "Sheathing". Face grain of plywood or strength axis joists with joints staggered.

**Vapor Barrier — (Optional) —** Nom 0.030 in. thick commercial asphalt saturated felt.

**Finish Flooring — Floor Topping Mixture* —** Min 3/4 in. thickness of floor topping mixture for 15/32 in. thick wood structural panels respectively, having a min compressive strength of 2100 psi. Refer to manufacturer's instructions accompanying the material for specific mix design.

**THE STRONG CO INC —** Type UltraLevel

2. **Wood Joists —** Min 2 by 10, spaced 16 in. OC and effectively fireblocked in accordance with local codes.
3. **Cross Bridging —** Min 1 by 3 in. or min 2 by 10 solid blocking.
3A. **Horizontal Bridging —** Used in lieu of Item 3 in same joist bay as ceiling damper (Item 4), when ceiling damper is employed. Wood 2 by 4 in. secured between joists with nails.
4. **Ceiling Damper* - (Optional) —** Max nom area shall be 198 sq in. Max rectangular size shall be 12 in. wide by 16-1/2 in. long. Max height of damper shall be 9-3/8 in. Aggregate damper openings shall not exceed 99 sq in. per 100 sq ft of ceiling area. Damper installed in accordance with the manufacturers installation instructions provided with the damper. A steel grille (Item 7) shall be installed in accordance with installation instructions.
**AIR BALANCE INC —** Type 299 (See Item 5A)

**AIR KING VENTILATION PRODUCTS —** Series AS, Series AK

**AIR MANAGEMENT INC —** Models AMI-50-CD-WG-B, AMI-50-CD-WG-B/VC

**CENTRAL VENTILATION SYSTEMS CO L L C —** Models C-S/R-HC(-A), C-RD-HC(-A)

**GREENHECK FAN CORP —** Model CRD-1WJ

**METAL-FAB INC —** Models MSCDHC, MRDCHD

**METAL INDUSTRIES INC —** Models CD-S/R-HC, CD-S/R-HC-A, CD-RD-HC, CD-RD-HC-A

**METROPOLITAN AIR TECHNOLOGY —** Model C-S/R-HC

**NCA MFG INC —** Models CD-S/R-HC, CD-S/R-HC-A, CD-RD-HC, CD-RD-HC-A

**PRICE INDUSTRIES LTD —** Models CD-S/R-HC, CD-RD-HC

**RUSKIN COMPANY —** Model CFD7

**UNITED ENERTECH CORP —** Models C-S/R-HC(-A), C-RD-HC(-A)

5. **Gypsum Board* —** (Finish Rating - 30 minutes unless otherwise noted) - Nom 5/8 in. thick, 48 in. wide gypsum board, installed with long dimension perpendicular to joists. Gypsum board secured with 1-7/8 in. long, 6d cement coated nails spaced 6 in. OC.
**ACADIA DRYWALL SUPPLIES LTD —** Type X

**AMERICAN GYPSUM CO —** Types AGX-1, AG-C

**BEIJING NEW BUILDING MATERIALS PUBLIC LTD CO —** Type DBX-1

**CERTAINTEED GYPSUM INC —** Types EGRG, GlasRoc, FRPC, SF3, Type C, Type X

**CERTAINTEED GYPSUM CANADA INC —** Type C, Type X, Type Abuse-Resistant

**CGC INC —** Types C, IP-X1, IP-X2, IPC-AR, SCX, WRX

**GEORGIA-PACIFIC GYPSUM L L C —** Types 5, 9, C, GPFS1, GPFS6, DA, DAP, DAPC, DGG, DS.

**LAFARGE NORTH AMERICA INC —** Types LGFC3, LGFC6, LGFC6A, LGFC-C, LGFC-C/A

**NATIONAL GYPSUM CO —** Types FSK, FSK-C, FSK-G, FSL, FSW, FSW-2, FSW-3, FSW-C, FSW-G, FSW-6

**PABCO BUILDING PRODUCTS L L C, DBA PABCO GYPSUM —** Types C, PG-3, PG-4, PG-5, PG-6, PG-9, PG-C, PG-11, PGS-WRS (Finish Rating 21 minutes)

**PANEL REY S A —** Type PRC

**SIAM GYPSUM INDUSTRY (SARABURI) CO LTD —** Type EX-1

**TEMPLE-INLAND —** Type X, Veneer Plaster Base-Type X, Water Rated-Type X, Sheathing Type-X, Soffit-Type X, TG-C, GreenGlass Type X. Finish rating of 20 mins. applies when using Type LWX, Veneer Plaster Base-Type LWX, Water Rated-Type LWX, Sheathing Type-LWX, Soffit-Type LWX.

**THAI GYPSUM PRODUCTS PCL —** Type C, Type X.

**UNITED STATES GYPSUM CO —** Types C, IP-X1, IP-X2, IPC-AR, SCX, WRX

**USG MEXICO S A DE C V —** Types C, IP-X1, IP-X2, IPC-AR, SCX, WRX

5A. **Gypsum Board* —** (Finish Rating - 16 min.) Required when Air Balance Inc. Type 299 ceiling damper (Item 4) is installed. Nor board, installed with long dimension perpendicular to joists. Gypsum board secured with 1-7/8 in. long, 6d cement coated nails spa located 1/2 in. and 3 in. from the board edges.
**UNITED STATES GYPSUM CO —** Type C

**USG MEXICO S A DE C V —** Type C

6. **Finishing System - (Not shown) —** Vinyl, dry or premixed joint compound, applied in two coats to joints and screw-heads. Nom 2 first layer of compound over all joints. As an alternate, nom 3/32 in. thick veneer plaster may be applied to the entire surface of g
7. **Grille —** Steel grille, installed in accordance with the installation instructions provided with the ceiling damper.
8. **Steel Corner Fasteners —** (Optional-not shown) - Used to attach ends of gypsum board at wall intersection where joists run para long by 1 in. high on the back side with two 1/8 in. wide cleats protruding into the 5/8 in. wide channel, fabricated from 24 gauge g to face of wall bearing plate through fastener tab with one No. 6d cement coated nail, spaced not greater than 16 in. OC and 2 in. Fasteners covered with gypsum board facing applied to intersecting wall.
*Bearing the UL Classification Mark

Reviewed for Code Compliance
Inspections Division
Approved with Conditions

Date: 11/08/13

Last Updated on 2013-09-30

Manufacturer of Natural Fiber Insula

Reviewed for Code Compliance
Inspections Division
Approved with Conditions

Date: 11/08/13

# Resistance

## Guaranteed Fire Resistance

*GreenFiber's Natural Fiber Insulation products and Fire Rated Material, FRM™ – a proprietary material used in separation walls-enhance fire resistance and are guaranteed to retain their fire retardant characteristics for the life of the structure. All of GreenFiber's products are made with 85% recycled paper fiber. Our products are treated with fire retardants and carry a Class 1/A fire rating.*

## Alternative to Fire Blocking

GreenFiber's products can also be used as alternatives to traditional building code fire blocking measures. Walls filled with GreenFiber Insulation and FRM will meet building code provisions for adequate protection around non-combustible through penetrations.

GreenFiber's ICC Evaluation Service Report – 1996, section 4.4 Fire Blocking, states "Cocoon and Cocoon2 Insulations are permitted as fire blocking in accordance with IBC Section 717.2.1, BNBC Section 721.2 or UBC Section 708.2.1, Item 1, and are permitted to be used as alternates to the fire blocking in IRC Section R602.8.1.

Normally, membrane penetrations for such things as wall receptacles require a separation of at least 24" on opposite sides of a fire rated wall. However, if GreenFiber's Insulation or FRM is filled in the wall, the horizontal separation need only be equal to the wall's thickness.

## Surface Burning Cl

GreenFiber's insulation and FRM produ index of not more than 25, and have a smoke-developed index of not more than 50 as tested per ASTM E 84. GreenFiber's Insulation and FRM meet the ASTM C-739 requirement for Smoldering Combustion and Critical Radiant Flux.

GreenFiber products are listed in many nonpropietary UL fire resistance rated assemblies in their Fire Resistance Directory.

## Outperforms Other Materials

The Big Burn, a home fire demonstration, was performed in 1998 at the Maryland Fire and Rescue Institute under the supervision of The Code Consortium, Inc. and Steven Winter Associates.

The results of this demonstration correspond closely with the results achieved by the National Fire Laboratory of the National Research Council Canada. The cellulose insulation structure maintained its structural integrity, for a total time of 68.08 minutes, in excess of 24 minutes longer than the fiberglass structure or the uninsulated structure translating to an increased fire resistance of 57% as compared to the 55% improvement achieved in the laboratory study.

Cocoon and Cocoon² are discontinued Brand names. The Products are still the same.

US GreenFiber, LLC
2500 Distribution Street, Suite 200
Charlotte, NC 28203

1-800-228-0024

www.greenfiber.com

*The information and recommendations contained herein are offered as a convenience to our customers, but are not intended to relieve the user from its responsibility to review, investigate and understand all applicable codes, standards, guidelines and other pertinent information. The user maintains the full and complete responsibility to comply with all codes, laws, regulations, procedures, guidelines and standards applicable to the safe and proper handling and use of the product. The information obtained herein is believed to be accurate at the time of preparation or was obtained from sources believed to be generally reliable. USGF makes no warranty concerning the accuracy of this information and will not be liable for claims relating to the use of or reliance upon the information contained herein, regardless of whether it is claimed that the information or recommendations are inaccurate, incomplete or incorrect.*

ATTIC CARD

## THIS IS GREENFIBER® ALL BORATE LOOSE FILL FORMULA INSULATION

**Application Coverage Chart** — 30 lbs (13.6 kg) — INS765LD

| R-Value at 75° F Mean Temp. / Valor de resistencia termica (valor R) a 75 F de temperatura media | Minimum Thickness (inches) / Expesor minimo (en pulgadas) | | Net Coverage (no adjustment for framing) / Cubertura neta (sin compensación para el estructura) | | | Net Coverage (adjusted for 2" x 6" framing on 16" centers) / Cobertura neta (con compensación para una estructura de 2" x 6" en centros de 16") | |
|---|---|---|---|---|---|---|---|
| | Initial Installed Thickness / Espesor inicial instalado | Settled Thickness / Espesor asentado | Maximum Sq. Ft. per Bag / Pies cuadrados máximos por bolsa | Mimimum Bags per 1,000 Sq. Ft. / Cantidad minima de bolsas por 1,000 pies cuadrados | Minimum Weight per Sq. Ft. / Peso minimo por pie cuadrado | Maximum Sq. Ft. per Bag / Pies cuadrados máximos por bolsa | Mimimum Bags per 1,000 Sq. Ft. / Cantidad minima de bolsas por 1,000 pies cuadrados |
| 11 | 3.36 | 3.02 | 100.8 | 9.9 | 0.298 | 111.3 | 9.0 |
| 13 | 3.99 | 3.59 | 83.5 | 12.0 | 0.359 | 92.2 | 10.8 |
| 19 | 5.86 | 5.27 | 54.3 | 18.4 | 0.552 | 59.6 | 16.8 |
| 22 | 6.77 | 6.10 | 45.9 | 21.8 | 0.653 | 49.7 | 20.1 |
| 26 | 7.99 | 7.19 | 37.8 | 26.4 | 0.793 | 40.5 | 24.7 |
| 30 | 9.19 | 8.27 | 32.0 | 31.2 | 0.937 | 33.9 | 29.5 |
| 32 | 9.79 | 8.81 | 29.6 | 33.7 | 1.01 | 31.3 | 32.0 |
| 38 | 11.57 | 10.41 | 24.1 | 41.4 | 1.24 | 25.3 | 39.6 |
| 40 | 12.16 | 10.94 | 22.7 | 44.1 | 1.32 | 23.7 | 42.2 |
| 44 | 13.33 | 11.99 | 20.2 | 49.6 | 1.49 | 21.0 | 47.6 |
| 48 | 14.49 | 13.04 | 18.1 | 55.2 | 1.66 | 18.8 | 53.2 |
| 49 | 14.78 | 13.30 | 17.7 | 56.6 | 1.70 | 18.3 | 54.6 |
| 50 | 15.07 | 13.57 | 17.2 | 58.1 | 1.74 | 17.8 | 56.1 |
| 60 | 17.96 | 16.16 | 13.7 | 73.1 | 2.19 | 14.1 | 71.0 |

THE ABOVE COVERAGE CHART IS BASED ON A NOMINAL BAG WEIGHT OF 30 LBS USING A VOLUMATIC III, 3rd GEAR AND 8" GATE. THE CHART IS BASED ON SETTLED THICKNESS AND IS FOR ESTIMATING PURPOSES ONLY. DO NOT EXCEED MAXIMUM SQUARE FEET COVERAGE PER BAG. THE APPLICATOR MUST INSTALL BOTH THE MINIMUM NUMBER OF BAGS PER 1000 SQ. FT. AND THE MINIMUM INSTALLED THICKNESS TO INSURE THE STATED R-VALUE HAS BEEN REACHED. FAILURE TO MEET BOTH THESE REQUIREMENTS MAY PREVENT THE APPLICATION OF SPECIFIED R-VALUE. THIS PRODUCT IS INTENDED FOR DRY APPLICATION ONLY. JOB CONDITIONS, APLLICATION TECHNIQUES, EQUIPMENT, AND SETTING CAN INFLUENCE ACTUAL COVERAGE. DO NOT ADD WATER TO THIS PRODUCT. MINIMUM NET WIEGHT IS 28.5 LBS.

**Dry Dense Pack Sidewall Applications** (3.5 pcf minimum installed density) 30 lbs. (13.6 kg) INS765LD

| Thermal Resistance (R value) / Resistencia térmic a (R) | Framing / Estructura | Installed Thickness (inches) / Espesor instalado (pulgadas) | Minimum Wt. Per Square Foot lb/ft² / Peso mínimo por pie cuadrado lb/ft² | Maximum Coverage Per Bag (No Adjustment for Framing) ft²/Bag / Cobertura máxima por bolsa (sin compensación para la estructura) ft²/Bag | Maximum Coverage Per Bag (Adjusted for Framing) ft²/Bag / Cobertura máxima por bolsa (con compensación para la estructura) ft²/Bag | |
|---|---|---|---|---|---|---|
| | | | | | (16" oc) | (24" oc) |
| 13 | 2x4 | 3.5 | 1.02 | 29.39 | 32.4 | 31.3 |
| 21 | 2x6 | 5.5 | 1.60 | 18.70 | 20.6 | 19.9 |

THIS COVERAGE CHART IS FOR DRY APPLICATIONS ONLY AND IS BASED ON THE KRENDL KS200, WITH MATERIAL APPLIED DRY. FOR MAXIMUM COVERAGE PER BAG (ADJUSTED FOR FRAMING), THE FRAMING FACTOR FOR 16" OC STUD SPACING IS 9.375%; FOR 24" OC STUD SPACING THE FRAMING FACTOR IS 6.25%.

GreenFiber provides outstanding thermal pe
sound control. Consisting of 85% recycled c
specially treated for flame resistance.

R-value means resistance to heat flow - the
the insulation power.

Reviewed for Code Compliance
Inspections Division
Approved with Conditions

Date: 11/08/13

CERTIFICATION:
This insulation has been installed in conformance with the above recommendations, to provide a value of R-_____ using _____ bags of this insulation to cover _____ square feet of area.

Builder's Signature: _____
Company Name: _____
Date: _____

Applicator's Signature: _____
Company Name: _____
Date: _____

FOR MORE INFORMATION CONTACT GREENFIBER:
**800.228.0024**
**greenfiber.info@greenfiber.com**

GreenFiber Corporate Office
2500 Distribution Street, Suite 200
Charlotte NC 28203
www.greenfiber.com

MANUFACTURING LOCATIONS:
Albany, NY
Charlotte, NC
Delphos, OH
Norfolk, NE
Phoenix, AZ
Salt Lake City, UT
Tampa, FL
Waco, TX

SCS CERTIFIED Minimum 85% Recycled Content
55% Post-consumer
30% Pre-consumer
SCIENTIFIC CERTIFICATION SYSTEMS SCS-MC-02055

MADE IN THE USA

Seal and Insulate with ENERGY STAR
LEARN MORE AT energystar.gov

PM-6.3-327 Rev A 08/11
TM-6.4-11 Rev C 05/10

Reviewed for Code Compliance
Inspections Division
Approved with Conditions

Date: 11/08/13

# FS-ONE
# High Performance Intumescent Firestop Sealant

## Product description

- Intumescent (expands when exposed to fire) firestop sealant that helps protect combustible and non-combustible penetrations for up to 4 hours fire rating

## Areas of application

- Steel, copper and EMT pipes
- Insulated steel and copper pipes
- Cable bundles
- Closed or vented plastic pipes
- HVAC penetrations

## For use with

- Concrete, masonry, drywall and wood floor assemblies
- Wall and floor assemblies rated up to 4 hours

## Examples

- Sealing around plastic pipe penetrations in fire rated construction
- Sealing around combustible and non-combustible penetrations in fire rated construction

## System advantage/Customer benefits

- Protects most typical firestop penetration applications
- Easy to work with and fast cleanup
- Can be repenetrated when laying new cables
- Can be painted

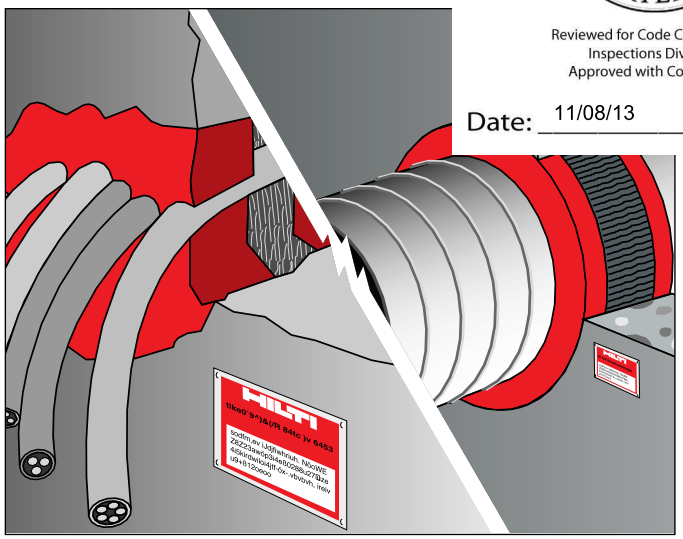

## Internationally tested and approved

CLASSIFIED UL
FILL, VOID OR CAVITY MATERIALS
CLASSIFIED BY
UNDERWRITERS LABORATORIES, INC.
FOR USE IN TROUGH-PENETRATION
FIRESTOP SYSTEMS
SEE UL FIRE RESISTANCE DIRECTORY
66Y7

FM
APPROVED
For Penetration Fire Stops.
Consult the Factory Mutual Research Corporation Approval Guide.

---

# FS-ONE
# Intumescent Firestop Sealant

| Ordering Description | Color | Package contents | Volume | Item No. |
|---|---|---|---|---|
| FS-ONE, tube | red | 10.1 oz. (300 ml) | 18 in³ | 00259579 |
| FS-ONE, foil | red | (Qty 20) 20.2 oz. (600 ml) | 36 in³ | 00311387 |
| FS-ONE, pail | red | 5 Gallons (19 liter) | 1155 in³ | 00259578 |
| CB 200 PI-300/310 ml Dispenser | | | | 00055205 |
| 600 ml Foil Dispenser | | | | 00024669 |

Reviewed for Code Compliance
Inspections Division
Approved with Conditions
Date: 11/08/13

# FS-ONE
# High Performance Intumescent Firestop Sealant

## Product description

- Intumescent (expands when exposed to fire) firestop sealant that helps protect combustible and non-combustible penetrations for up to 4 hours fire rating

## Product features

- Smoke, gas and water resistant
- Contains no halogen, solvents or asbestos
- High fire rating properties
- Water based, easy to clean

## Tested in accordance with

- UL 1479
- ASTM E 814
- ASTM E 84

## Technical Data

### FS-ONE Intumescent Firesto

(at 73°F (23°C) and 50% relative humidity)

| | |
|---|---|
| Chemical basis: | Water-ba |
| Density: | Approx. 1.5 g/cm³ |
| Color: | Red |
| Working time: | Approx. 20-30 min |
| Curing time: | Approx. 14-21 days |
| Shore A Hardness: | Approx. 35 |
| Movement capability: | Approx. 5% |
| Intumescent Activation: | Approx 250°F (121°C) |
| Expansion rate (unrestricted): | Up to 3-5 times original volume |
| Temperature resistance (cured): | -40°F (-40°C) to 212°F (100°C) |
| Application temperature: | 35°F (2°C) to 100°F (38°C) |
| Surface burning characteristics: (ASTM E 84-96) | Flame Spread: 0<br>Smoke Development: 5 |
| Sound transmission classification: ASTM E 90-97 | 50 |

## Approvals

| | |
|---|---|
| ICBO Evaluation Service, Inc. | Report No. 5071 |
| California State Fire Marshal | Listing No. 1200:108 |
| City of New York | MEA 326-96-M Vol. II |

## Installation instructions for FS-ONE

**Cable installation**

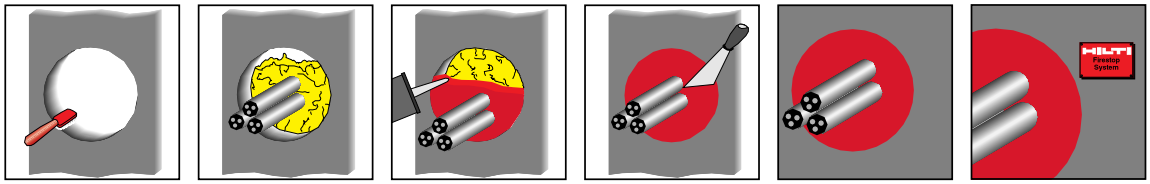

1. Clean opening.
2. Pack mineral wool. (If required)
3. Apply FS-ONE.
4. Smooth FS-ONE.
5. Leave completed seal undisturbed for 48 hours.
6. Fasten identification plate (if required).

**Pipe installation**

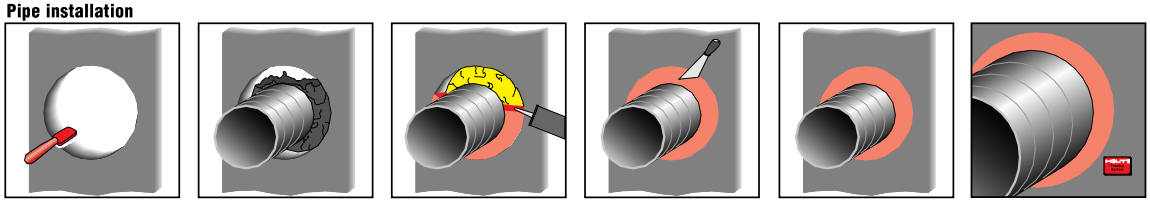

1. Clean opening.
2. Pack mineral wool. (If required)
3. Apply FS-ONE.
4. Smooth FS-ONE.
5. Leave completed seal undisturbed for 48 hours.
6. Fasten identification plate (if required).

**Opening**

1. Clean the opening. Surfaces to which FS-ONE will be applied should be cleaned of loose debris, dirt, oil, moisture, frost and wax. Structures supporting penetrating items must be installed in compliance with local building and electrical standards.

**Application of firestop sealant**

2. Install the prescribed backfilling material type and depth to obtain the desired rating (if required). Leave sufficient depth for applying FS-ONE.
3. Application of firestop sealant: Apply FS-ONE to the required depth in order to obtain the desired fire rating. Make sure FS-ONE contacts all surfaces to provide maximum adhesion. For application of FS-ONE use a standard caulking gun, foil pack gun, bulk loader and bulk gun. With FS-ONE buckets, Graco type sealant pumps may be used. (Contact pump manufacturer for proper selection).
4. Smoothing of firestop sealant: To complete the seal, tool immediately to give a smooth appearance. Excess sealant, prior to curing, can be cleaned away from adjacent surfaces and tools with water.
5. Leave completed seal undisturbed for 48 hours.
6. For maintenance reasons, a penetration seal could be permanently marked with an identification plate. In such a case, mark the identification plate and fasten it in a visible position next to the seal.

**Notice about approvals**

- Check that the penetration has been sealed according to the specified drawing in the UL Fire Resistance Directory or Hilti Firestop Manual. For further advice, please contact Hilti customer service. Refer to Hilti product literature and UL fire resistance directory for specific application details.

**Not for use…**

- High movement expansion joints
- Underwater
- On materials where oil, plasticizers or solvents may bleed i.e. impregnated wood, oil based seals, green or partially vulcanized rubber
- In any penetration other than those specifically described in this manual or the test reports

**Safety precautions**

- Before handling, read the product and Material Safety Data Sheet for detailed use and health information
- Keep out of reach of children
- Wear suitable gloves and eye protection

**Storage**

- Store only in the original packaging in a location protected from moisture at temperatures between 40°F (5°C) and 86°F (30°C)
- Observe expiration date on the packaging

# Material Safety Data Sheet

Reviewed for Code Compliance
Inspections Division
Approved with Conditions
Date: 11/08/13

**HILTI, INC.:** **P.O. Box 21148, Tulsa, OK 74121; Ph: 1 800 879 6000; Emergency No.: 1 8(**

**PRODUCT NAME:** **FS-ONE High Performance Intumescent Firestop Sealant**

**DESCRIPTION:** **One-part acrylic-based sealant**

MSDS N
Revisior
Date:
Page:

## INGREDIENTS AND EXPOSURE LIMITS

| *Ingredients:* | *CAS Number:* | *PEL:* | *TLV:* | *TEL:* |
|---|---|---|---|---|
| Calcium carbonate | 01317-65-3 | 5 mg/m$^3$ (T) | 10 mg/m$^3$ (T) | NE |
| Ammonium polyphosphate | 68333-79-9 | NE | NE | NE |
| Boron trioxide | 01303-86-2 | 15 mg/m$^3$ (R) | 10 mg/m$^3$ | NE |
| Alkylphenolethersulfate, sodium salt | 69011-84-3 | NE | NE | NE |
| Talc | 14807-96-6 | 20 mppcf | 2 mg/m$^3$ | NE |
| Zinc oxide | 01314-13-2 | 5 mg/m$^3$ (T) | 10 mg/m$^3$ | NE |
| Expandable graphite | 12777-87-6 | 5 mg/m$^3$ (T) | 2 mg/m$^3$ (T) | NE |
| Ethylene glycol | 00107-21-1 | NE | C:100 mg/m$^3$ (A) | NE |
| Polybutene | 09003-29-6 | NE | NE | NE |
| Iron oxide | 01309-37-1 | 10 mg/m$^3$ | 5 mg/m$^3$ | NE |
| Glass filament | 65997-17-3 | NE | 5 mg/m$^3$ (T) | NE |
| Silicon dioxide | 14808-60-7 | 0.05 mg/m$^3$ (T) | 0.1 mg/m$^3$ (T) | NE |

Abbreviations: PEL = OSHA Permissible Exposure Limit. TLV = ACGIH Threshold Limit Value. C = Ceiling. STEL = Short Term Exposure Limit. NE = None Established. NA = Not Applicable. (T) indicates “as total dust”. (R) indicates “as respirable fraction”. (A) indicates “as an aerosol”. mppcf = million particles per cubic foot.

## PHYSICAL DATA

| | | | |
|---|---|---|---|
| Appearance: | Red paste. | Odor: | Odorless. |
| Vapor Density: (air = 1) | Not determined. | Vapor Pressure: | 23mbar @ 20C / 68F |
| Boiling Point: | Not applicable. | VOC Content: | None. |
| Evaporation Rate: | Not applicable. | Solubility in Water: | Soluble. |
| Specific Gravity: | 1.5 | pH: | Notdetermined. |

## FIRE AND EXPLOSION HAZARD DATA

| | |
|---|---|
| Flash Point: | Non-flammable. |
| Flammable Limits: | Not applicable. |
| Extinguishing Media: | Not applicable. Use extinguishing media as appropriate for surrounding fire. |
| Special Fire Fighting Procedures: | None known. Use a self-contained breathing apparatus when fighting fires involving chemicals. |
| Unusual Fire and Explosion Hazards: | None known. Thermal decomposition products can be formed. |

## REACTIVITY DATA

| | |
|---|---|
| Stability: | Stable. |
| Hazardous Polymerization: | Will not occur. |
| Incompatibility: | Strong acids, peroxides, and oxidizing agents. |
| Decomposition Products: | Thermal decomposition can yield CO and CO2. |
| Conditions to Avoid: | None known. |

## HEALTH HAZARD DATA

| | |
|---|---|
| Known Hazards: | None known. |
| Carcinogenicity: | IARC classifies crystalline silica (quartz sand) as Gp I based upon evidence among workers in industries where there has been long-term and chronic exposure (via inhalation) to silica dust; e.g. mining, quarry, stone crushing, refractory brick and pottery workers. This product does not pose a dust hazard; therefore, this classification is not relevant. Based upon the nature and intended use of this product, it does not pose an increased cancer risk to workers. |

RESURGAM CITY OF PORTLAND, MAINE
Reviewed for Code Compliance
Inspections Division
Approved with Conditions
Date: 11/08/13

| | |
|---|---|
| Signs and Symptoms of Exposure: | Possibly irritating upon contact with the eyes or upon rep with the skin. |
| Routes of Exposure: | Dermal. |
| Medical Conditions Aggravated by Exposure: | Eye and skin conditions. |

## EMERGENCY AND FIRST AID PROCEDURES

| | |
|---|---|
| Eyes: | Immediately flush with plenty of water. Call a physician if symptoms occur. |
| Skin: | Immediately wipe off material and wash with soap and water. Material can adhere to the skin. If material has adhered to the skin, use an abrasive containing hand cleaner. If material does not come off, buff with a pumice stone. |
| Inhalation: | Move victim to fresh air if discomfort develops. Call a physician if symptoms persist. |
| Ingestion: | Seek medical attention. Do not induce vomiting unless directed by a physician. Never give anything by mouth to an unconscious person. |
| Other: | Referral to a physician is recommended if there is any question about the seriousness of the injury/exposure. |

## CONTROL MEASURES AND PERSONAL PROTECTIVE EQUIPMENT

| | |
|---|---|
| Ventilation: | General (natural or mechanically induced fresh air movements). |
| Eye Protection: | Not required, however, safety glasses should be worn in most industrial settings. |
| Skin Protection: | Avoid skin contact. Cloth gloves are suitable for hand protection. |
| Respiratory Protection: | None normally required. Where ventilation is inadequate to control vapors, use a NIOSH-approved respirator with organic vapor cartridges. Never enter a confined space without an appropriate air-supplied respirator. |

## PRECAUTIONS FOR SAFE HANDLING AND USE

| | |
|---|---|
| Handling and Storing Precautions: | Store in a cool, dry area preferably between 50° and 100° F. Keep from freezing. Do not store in direct sunlight. Avoid contact with the eyes or skin. Practice good hygiene; i.e. always wash thoroughly after handling and before eating or smoking. For industrial use only. Keep out of reach of children. Follow label/use instructions. |
| Spill Procedures: | Immediately wipe away spilled material before it hardens. Place in a container for proper disposal in accordance with all applicable local, state, or federal requirements. |

## REGULATORY INFORMATION

| | |
|---|---|
| Hazard Communication: | This MSDS has been prepared in accordance with the federal OSHA Hazard Communication Standard 29 CFR 1910.1200. |
| HMIS Codes: | Health 1, Flammability 0, Reactivity 0, PPE B |
| DOT Shipping Name: | Not regulated. |
| TSCA Inventory Status: | Chemical components listed on TSCA inventory. |
| SARA Title III, Section 313: | This product contains 1-5% ethylene glycol (CAS 107-21-1) and 1-5% zinc oxide (re: zinc compounds) which are subject to reporting under Section 313 of SARA Title III (40 CFR Part 372). |
| EPA Waste Code(s): | Not regulated by EPA as a hazardous waste. |
| Waste Disposal Methods: | Consult with regulatory agencies or your corporate personnel for disposal methods that comply with local, state, and federal safety, health and environmental regulations. |

## CONTACTS

| | |
|---|---|
| Customer Service: | 1 800 879 8000 |
| Technical Service: | 1 800 879 8000 |
| Emergency: | 1 800 879 4444 |
| Health / Safety: | 1 800 879 6000 Steve Gerrard (x6309) Jerry Metcalf (x6704) |

The information and recommendations contained herein are based upon data believed to be correct; however, no guarantee or warranty of any kind expressed or implied is made with respect to the information provided.

Reviewed for Code Compliance
Inspections Division
Approved with Conditions

Date: 11/08/13

Underwriters Laboratories Inc.®

Northbrook, Illinois • (7(
Melville, New York • (51
Santa Clara, California •
Research Triangle Park,
North Carolina • (919) 549-1400

# CERTIFICATE OF COMPLIANCE

**CERTIFICATE NUMBER:** 211097 - R13240A
**ISSUE DATE:** October 21, 1997

Issued to: Hilti Construction Chemicals Inc.
5400 S. 122nd East Avenue
Tulsa, OK 74146 USA

Report Reference: R13240, February 14, 1997

This is to Certify that representative samples of: Fill, Void or Cavity Materials, one part Sealant designated as FS One (also identified as CP 612)

Have been investigated by Underwriters Laboratories Inc. in accordance with the Standard(s) indicated on this Certificate.

Standard(s) for Safety: UL 1479, Fire Tests of Through-Penetration Firestops;

UL 2079, Tests for Fire Resistance of Building Joint Systems.

Additional Information:

*This material is a one part intumescent firestop sealant for use in through-penetration firestop systems. These sealants are Classified as "Fill, Void or Cavity Materials" for use in various Through-Penetration Firestop Systems as specified in Volume 2 of UL's Fire Resistance Directory.*

**Only those products bearing the UL Classification Marking should be considered as being covered by UL's Classification and Follow-Up Service.**

The UL Classification Marking includes: the name "Underwriters Laboratories Inc."; the word "Classified"; a control number (may be alphanumeric) assigned by UL; a statement to indicate the extent of UL's evaluation of the product; and, the product category name (product identity) as indicated in the appropriate UL Directory.

LOOK FOR THE UL CLASSIFICATION MARKING ON THE PRODUCT

Engineer: Nikola Momcilovic
Underwriters Laboratories Inc.
Nikola Momcilovic

Review Engineer:
Underwriters Laboratories Inc.
A. M. Ramirez

2000-44C (6/92)

RESURGAM CITY OF PORTLAND, MAINE
Reviewed for Code Compliance
Inspections Division
Approved with Conditions
Date: 11/08/13

**R302.2.3 Parapet construction.** Parapets shall have the same fire-resistance rating as that required for the supporting wall or walls. On any side adjacent to a roof surface, the parapet shall have noncombustible faces for the uppermost 18 inches (457 mm), to include counterflashing and coping materials. Where the roof slopes toward a parapet at slopes greater than 2 units vertical in 12 units horizontal (16.7-percent slope), the parapet shall extend to the same height as any portion of the roof within a distance of 3 feet (914 mm), but in no case shall the height be less than 30 inches (762 mm).

**R302.2.4 Structural independence.** Each individual *townhouse* shall be structurally independent.

**Exceptions:**

1. Foundations supporting *exterior walls* or common walls.
2. Structural roof and wall sheathing from each unit may fasten to the common wall framing.
3. Nonstructural wall and roof coverings.
4. Flashing at termination of roof covering over common wall.
5. *Townhouses* separated by a common 1-hour fire-resistance-rated wall as provided in Section R302.2.

**R302.3 Two-family dwellings.** *Dwelling units* in two-family dwellings shall be separated from each other by wall and/or floor assemblies having not less than a 1-hour fire-resistance rating when tested in accordance with ASTM E 119 or UL 263. Fire-resistance-rated floor-ceiling and wall assemblies shall extend to and be tight against the *exterior wall*, and wall assemblies shall extend from the foundation to the underside of the roof sheathing.

**Exceptions:**

1. A fire-resistance rating of $^1/_2$ hour shall be permitted in buildings equipped throughout with an automatic sprinkler system installed in accordance with NFPA 13.
2. Wall assemblies need not extend through *attic* spaces when the ceiling is protected by not less than $^5/_8$-inch (15.9 mm) Type X gypsum board and an *attic* draft stop constructed as specified in Section R302.12.1 is provided above and along the wall assembly separating the *dwellings*. The structural framing supporting the ceiling shall also be protected by not less than $^1/_2$-inch (12.7 mm) gypsum board or equivalent.

**R302.3.1 Supporting construction.** When floor assemblies are required to be fire-resistance rated by Section R302.3, the supporting construction of such assemblies shall have an equal or greater fire-resistance rating.

**R302.4 Dwelling unit rated penetrations.** Penetrations of wall or floor/ceiling assemblies required to be fire-resistance rated in accordance with Section R302.2 or R302.3 shall be protected in accordance with this section.

**R302.4.1 Through penetratio**
fire-resistance-rated wall or flo
with Section R302.4.1.1 or R3(

**Exception:** Where the pene
rous or copper pipes, tubes o
shall be protected as follows

1. In concrete or masonry wall or floor assembly, concrete, grout or mortar shall be permitted where installed to the full thickness of the wall or floor assembly or the thickness required to maintain the fire-resistance rating, provided:
   1.1. The nominal diameter of the penetrating item is a maximum of 6 inches (152 mm); and
   1.2. The area of the opening through the wall does not exceed 144 square inches (92 900 mm$^2$).
2. The material used to fill the annular space shall prevent the passage of flame and hot gases sufficient to ignite cotton waste where subjected to ASTM E 119 or UL 263 time temperature fire conditions under a minimum positive pressure differential of 0.01 inch of water (3 Pa) at the location of the penetration for the time period equivalent to the fire resistance rating of the construction penetrated.

**R302.4.1.1 Fire-resistance-rated assembly.** Penetrations shall be installed as tested in the *approved* fire-resistance-rated assembly.

**R302.4.1.2 Penetration firestop system.** Penetrations shall be protected by an *approved* penetration firestop system installed as tested in accordance with ASTM E 814 or UL 1479, with a minimum positive pressure differential of 0.01 inch of water (3 Pa) and shall have an F rating of not less than the required fire-resistance rating of the wall or floor/ceiling assembly penetrated.

**R302.4.2 Membrane penetrations.** Membrane penetrations shall comply with Section R302.4.1. Where walls are required to have a fire-resistance rating, recessed fixtures shall be installed so that the required fire-resistance rating will not be reduced.

**Exceptions:**

1. Membrane penetrations of maximum 2-hour fire-resistance-rated walls and partitions by steel electrical boxes that do not exceed 16 square inches (0.0103 m$^2$) in area provided the aggregate area of the openings through the membrane does not exceed 100 square inches (0.0645 m$^2$) in any 100 square feet (9.29 m)$^2$ of wall area. The annular space between the wall membrane and the box shall not exceed $^1/_8$ inch (3.1 mm). Such boxes on opposite sides of the wall shall be separated by one of the following:
   1.1. By a horizontal distance of not less than 24 inches (610 mm) where the wall or parti-