Reviewed for Code Compliance
Inspections Division
Approved with Conditions
Date: 09/28/15

STRUCTURAL ANALYSIS REPORT

For

ME5048 (LTE-3C)

PORTLAND HARBOR TERRACE
284 Danforth Street
Portland, ME 04102

Antennas Mounted on Penthouse Façade and Ballast Frame; Equipment Platform on Roof

Prepared for:

SAI at&t

Dated: July 8, 2015

Prepared by:

Hudson Design Group LLC

STATE OF MAINE
DANIEL P. HAMM
No. 10344
LICENSED
PROFESSIONAL ENGINEER

7-8-15

1600 Osgood Street Building 20 North, Suite 3090
North Andover, MA 01845
Phone: (978) 557-5553
www.hudsondesigngroupllc.com

CITY OF PORTLAND, MAINE
Reviewed for Code Compliance
Inspections Division
Approved with Conditions
Date: 09/28/15

Hudson Design Group LLC

SCOPE OF WORK:

Hudson Design Group LLC (HDG) has been authorized by AT&T to conduct a structural evaluation of the structure that will support the existing AT&T equipment located in the areas depicted in the latest HDG's construction drawings.

This report represents this office's findings, conclusions and recommendations pertaining to the support of AT&T's proposed equipment.

CONCLUSION SUMMARY:

Building plans prepared by Leasure - Tuttle - Lee Architects - Engineers dated December 18, 1969 were available and were obtained for our use. A limited visual survey of the structure was completed in or near the areas of the proposed work.

Based on our evaluation, we have determined that the existing structure **IS CAPABLE** of supporting the proposed equipment loading with the following modifications:

- Remove the (4) blocks that the existing ballast frame is sitting on so that the frame lays flat on the roof. Addition rubber mats under the frame will be required.
- Reconfigure ballast blocks as to meet the requirements shown below:

MINIMUM BALLAST REQUIREMENTS (ALPHA)		
SIDE	A (Back)	B (Front)
BALLAST REQUIRED	1028 lbs.	455 lbs.
TOTAL BALLAST WEIGHT	1483 lbs.	

APPURTENACE/EQUIPMENT CONFIGURATION:

(3) HPA-65R-BUU-H8 Antennas (92.4"x14.8"x7.4" Wt. = 73 lbs. /each) (One per sector)

(3) RRH (RRUS-11) (19.69"x16.97"x7.17" – Wt. = 50.7 lbs. /each) (One per sector)

(3) A2 Module (16.4"x15.2"x3.4" – Wt. = 22 lbs. /each) (One per sector)

(3) Surge Arrestors (20.1"x18.2"x6.4" - Wt. = 43.5 lbs. /each) (One per sector)

(6) Powerwave 7770 Antennas (55"x11"x5" Wt. = 35 lbs. /each) (Two per sector)

(2) SBNH-1D6565C Antennas (96.4"x11.9"x7.1" Wt. = 61 lbs./ea) (Alpha & Gamma sector)

(1) P65-17-XLH-RR Antenna (96"x12"x6" Wt. = 70 lbs.) (Beta sector)

(6) RRH (RRUS-11) (19.69"x16.97"x7.17" – Wt. = 50.7 lbs. /each) (Two per sector)

Referenced documents are attached.

Reviewed for Code Compliance
Inspections Division
Approved with Conditions
Date: 09/28/15

Hudson Design Group LLC

DESIGN CRITERIA:

1. International Building Code (IBC) 2009, and ASCE 7-05 (Minimum Design Loads for Buildings and Other Structures).

   Wind Analysis:

Reference Wind Speed:	110 mph	(FIG 26.5C; ASCE 7-10)
Category:	C	(26.7.3; ASCE 7-10)

   Roof:

Ground Snow, P_g:	60 psf	(FIG 7-1; ASCE 7-05)
Importance Factor, I:	1.0	(Category II)
Exposure Factor, Ce:	0.9	(Fully Exposed)
Thermal Factor, Ct:	1.0	(Typical Structure)
Flat Roof Snow Load:	**37.8 psf**	**(P_f=0.7*Ce*Ct*I*P_g)**

2. EIA/TIA -222- G Structural Standards for Steel Antenna Towers and Antenna Supporting Structures

City/Town:	Portland
County:	Cumberland
Wind Load:	100 mph
Nominal Ice Thickness:	1 inch

3. Approximate height above grade to the center of the Antennas:

   86'-7"+/- (Alpha)
   93'-3"+/- (Beta)
   97'-3"+/- (Gamma)

Reviewed for Code Compliance
Inspections Division
Approved with Conditions
Date: 09/28/15

Hudson Design Group LLC

EXISTING ROOF CONSTRUCTION:

The roof construction consists of a single-ply EPDM membrane adhered to rigid insulation on a light gauge metal roof deck supported by a series of open web steel bar joists, steel beams and steel columns.

ANTENNA SUPPORT RECOMMENDATIONS:

- The new Alpha sector antenna is proposed to be mounted on a new pipe mast secured to the existing non-penetrating ballast frame on the roof.
- The new Beta and Gamma sector antennas are proposed to be mounted on new slider bracket wall mounts secured to the existing penthouse walls with epoxy anchors.

RRH / SURGE SUPPRESSOR SUPPORT RECOMMENDATIONS:

- The new Alpha sector RRH and Surge Suppressor are proposed to be mounted on new unistruts secured to the existing ballast mount.
- The new Beta and Gamma RRH's and Surge Suppressors are proposed to be mounted on new unistruts secured to the penthouse façade with epoxy anchors.

Limitations and assumptions:

1. Reference the latest HDG construction drawings for all the equipment locations details.
2. Mount all equipment per manufacturer's specifications.
3. All structural members and their connections are assumed to be in good condition and are free from defects with no deterioration to its member capacities.
4. All antennas, coax cables and waveguide cables are assumed to be properly installed and supported as per the manufacturer requirements.
5. HDG could not verify the support attachments to the roof structure at the time of our site visit. HDG is under the assumption that the equipment platform was constructed properly and adequately attached to the building structure over building columns.
6. HDG is not responsible for any modifications completed prior to and hereafter which HDG was not directly involved.
7. If field conditions differ from what is assumed in this report, then the engineer of record is to be notified as soon as possible.

Reviewed for Code Compliance
Inspections Division
Approved with Conditions
Date: 09/28/15

Hudson Design Group LLC

FIELD PHOTOS:

Photo 1: Sample photo illustrating the existing non-penetrating ballast frame.

Photo 2: Sample photo illustrating the existing antennas mounted to the penthouse.

Reviewed for Code Compliance
Inspections Division
Approved with Conditions
Date: 09/28/15

Hudson Design Group LLC

Alpha Sector Calculations

Reviewed for Code Compliance
Inspections Division
Approved with Conditions
Date: 09/28/15

)7-07-2015

Name: Portland Harbor Terrace

Number: ME5048

Designed By: GH **Checked By**: MSC

Hudson Design Group LLC

ALPHA SECTOR

2.6.5.2 Velocity Pressure Coeff:

$K_z = 2.01\ (z/z_g)^{2/\alpha}$

z=	86.6	(ft)
z_g=	1200	(ft)
α=	7	

K_z= 0.948

Kzmin ≤ Kz ≤ 2.01

Table 2-4

Exposure	Z_g	α	K_{zmin}	K_e
B	1200 ft	7.0	0.70	0.9
C	900 ft	9.5	0.85	1.0
D	700 ft	11.5	1.03	1.1

2.6.6.4 Topographic Factor:

Table 2-5

Topo. Category	K_t	f
2	0.43	1.25
3	0.53	2.0
4	0.72	1.5

$K_{zt} = [1+(K_e\ K_t/K_h)]^2$

$K_h = e^{(f*z/H)}$

K_{zt}= #DIV/0!

K_h=	#DIV/0!	
K_e=	0	(from Table 2-4)
K_t=	0	(from Table 2-5)
f=	0	(from Table 2-5)
z=	86.6	
H=	0	(Ht. of the crest above surrounding terrain)
K_{zt}=	1.00	

(If Category 1 then K_{zt} =1.0)

Category= **1**

Reviewed for Code Compliance
Inspections Division
Approved with Conditions
Date: 09/28/15

7-07-2015

Name: Portland Harbor Terrace

Number: ME5048

Designed By: GH **Checked By:** MSC

Hudson Design Group LLC

2.6.7 Gust Effect Factor

2.6.7.1 Self Supporting Lattice Structures

Gh = 1.0 Latticed Structures > 600 ft

Gh = 0.85 Latticed Structures 450 ft or less

Gh = 0.85 + 0.15 [h/150 - 3.0] h= ht. of structure

h=	102	Gh=	0.85

2.6.7.2 Guyed Masts	Gh=	0.85
2.6.7.3 Pole Structures	Gh=	1.1
2.6.9 Appurtenances	Gh=	1.0

2.6.7.4 Structures Supported on Other Structures
(Cantilivered tubular or latticed spines, pole, structures on buildings (ht. : width ratio > 5)

Gh=	1.35	**Gh=**	**1.35**

Reviewed for Code Compliance
Inspections Division
Approved with Conditions
Date: 09/28/15

7-07-2015

Name: Portland Harbor Terrace

Number: ME5048

Designed By: GH **Checked By:** MSC

Hudson Design Group LLC

2.6.9.2 Design Wind Force on Appurtenances

$$F = qz*Gh*(EPA)_A$$

$$q_z = 0.00256*K_z*K_{zt}*K_d*V_{max}^2*I$$

K_z=	0.948
K_{zt}=	1.0
K_d=	0.95
V_{max}=	100
I=	1.0

q_z= 23.07

Table 2-2

Structure Type	Wind Direction Probability Factor, Kd
Latticed structures with triangular, square or rectangular cross sections	0.85
Tubular pole structures, latticed structures with other cross sections, appurtenances	0.95

Determine Cf:

If lattice Structure See Manual

If Tubular Pole Structure, Use Corrected Value from Table 2.7 Below

C mph.ft	Round	18 Sided	16 Sided	12 Sided	8 Sided
< 32 (Subcritical)	1.2	1.2	1.2	1.2	1.2
32 to 64 (Transitional)	$38.4/C^{1.0}$	$25.8/C^{0.885}$	$12.6/C^{0.678}$	$2.99/C^{0.263}$	1.2
> 64 (Supercritical)	0.6	0.65	0.75	1	1.2

$$C = (I*K_{zt}*K_z)^{0.5}*V*D$$

D = Outside diameter for rounds: 0.25 feet

C= 24.35 **Cf= 1.2**

Reviewed for Code Compliance
Inspections Division
Approved with Conditions
Date: 09/28/15

7-07-2015

Name: Portland Harbor Terrace

Number: ME5048

Designed By: GH **Checked By:** MSC

Hudson Design Group LLC

Determine Ca:

Table 2-8

Force Coefficients (Ca) for Appurtenances				
Member Type		**Aspect Ratio ≤ 2.5**	**Aspect Ratio = 7**	**Aspect Ratio ≥ 25**
		Ca	**Ca**	**Ca**
Flat		1.2	1.4	2.0
Round	**C < 32** (Subcritical)	0.7	0.8	1.2
	32 ≤ C ≤ 64 (Transitional)	$3.76/(C^{0.485})$	$3.37/(C^{0.415})$	$38.4/(C^{-1.0})$
	C > 64 (Supercritical)	0.5	0.6	0.6

Aspect Ratio is the overall length/width ratio in the plane normal to the wind direction.
(Aspect ratio is independent of the spacing between support points of a linear appurtenance, and the section length considered to have uniform wind load).

Note: Linear interpolation may be used for aspect ratios other than those shown.

Appurtenances	Height	Width	Depth	Flat Area	Aspect Ratio	Ca	Force (lbs)
Powerwave 7770	55.0	11.0	5.0	4.20	5.00	1.31	**172**
SBNH-1D6565C	96.4	11.9	7.1	7.97	8.10	1.44	**356**
P65-17-XLH-RR	96.0	12.0	6.0	8.00	8.00	1.43	**357**
HPA-65R-BUU-H8	92.4	14.8	7.4	9.50	6.24	1.37	**404**
RRUS-11	19.7	17.0	7.2	2.33	1.16	1.20	**87**
Square Squid	20.1	18.2	6.4	2.54	1.10	1.20	**95**

Reviewed for Code Compliance
Inspections Division
Approved with Conditions
Date: 09/28/15

7/7/2015

mber: ME5048

me: Portland Harbor Terrace

Done by: GH **Checked by:** MSC

Hudson Design Group LLC

Calculate Total Ballast Required for Ballast Mount

WIND FORCES

F antenna = 1104 lbs.

F rrh = 269 lbs.

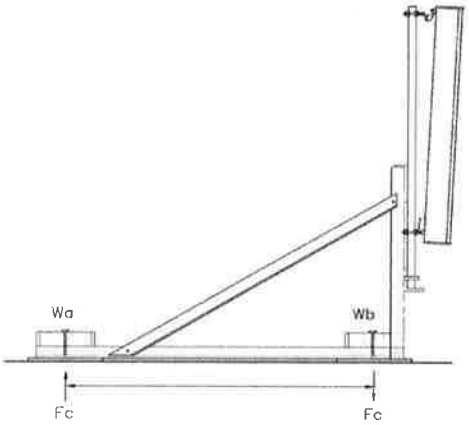

Antenna Height = 5 ft

RRH & Surge Height = 4 ft

Length = 7 ft

Overturning at Ballast

Moment = 8245 lbs.-ft

S.F.
1.25

Hold Down Force = 1177.86 lbs. Per Side

Wa Ballast

Equipment

Frame = 150 lbs.

Total Ballast Required Wa= **1027.86 lbs.**

Wb Ballast

Equipment

Frame	300 lbs.
Antennas	204 lbs.
RRH's	219 lbs.
Total =	723 lbs.

Total Ballast Required Wb = **454.86 lbs.**

Total weight of Fully Loaded Ballast Frame =	2356 lbs
Footprint Area under Ballast Frame =	58 ft^2
Area Load under Ballast Frame =	41 psf

CITY OF PORTLAND, MAINE
RESURGAM
Reviewed for Code Compliance
Inspections Division
Approved with Conditions
Date: 09/28/15

Partial Roof Framing Plan

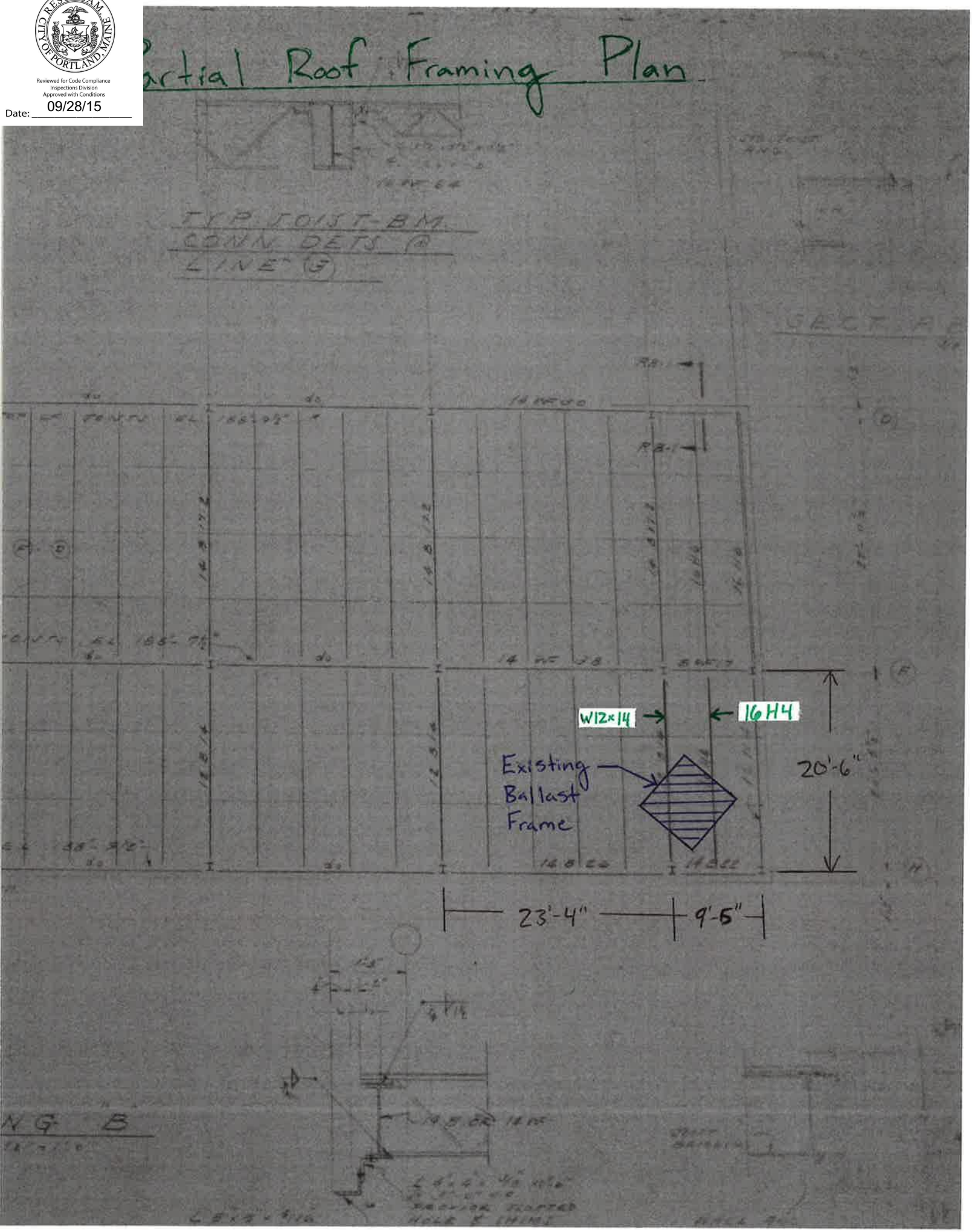

Reviewed for Code Compliance
Inspections Division
Approved with Conditions
Date: 09/28/15

7/7/2015
mber: ME5048
me: Portland Harbor Terrace
Done by: GH **Checked by:** MSC

Hudson Design Group LLC

Determine the Adequacy of the Existing Roof Joist Supporting the Additional Ballast Load:

16H4 Roof Joist

Roof Dead Load:

- Single Ply EPDM Membrane =	1.5 psf			
- Rigid Insulation =	1.5 psf			
- Metal Roof Deck =	3 psf			
- Misc. =	5 psf			
- TOTAL =	11 psf	x	5 ft = (Tributary)	**55 plf**

Live Load:

- Snow =	37.8 psf	x	5 ft = (Tributary)	**189 plf**

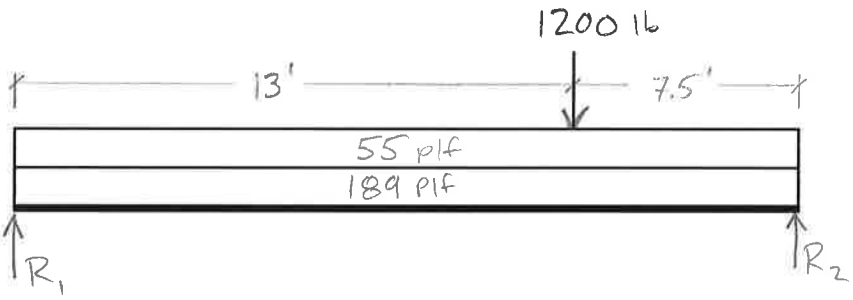

$\circlearrowleft + M_2 = 20.5R_1 - 1200(7.5) - (55+189)(20.5)\left(\frac{20.5}{2}\right) = 0$

$R_1 = 2940$ lbs

$R_2 = 3262$ lbs

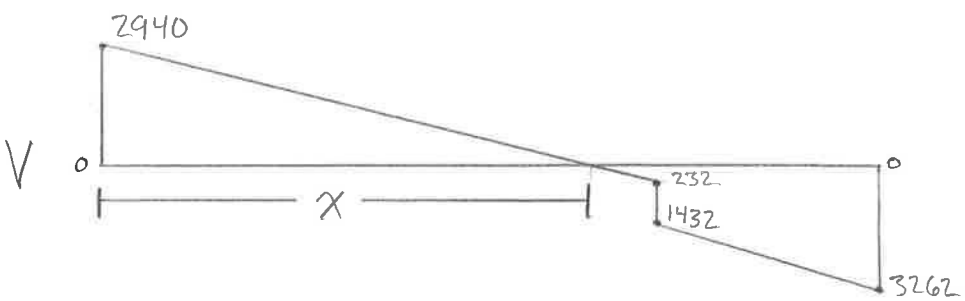

$$\frac{2940}{X} = \frac{3172}{13} \Rightarrow X = 12.05'$$

$$M_{max} = 2940 \text{ lbs}\left(\frac{12.05'}{2}\right) = 17714 \text{ ft-lbs} = 213 \text{ in-kips}$$

$M_{allow.} = 221$ in-kips > 213 in-kips $\therefore$ OK!

(SJI Std. Load Table)

CITY OF PORTLAND, MAINE
Reviewed for Code Compliance
Inspections Division
Approved with Conditions
Date: 09/28/15

TANDARD LOAD TABLE
PEN WEB STEEL JOISTS, H SERIES

Based on a Maximum Allowable Tensile Stress of 30,000 PSI††

ted by the Steel Joist Institute October 1, 1974, Revised to November 7, 1983.
dard Load Table, Copyright Steel Joist Institute. Reprinted by permission.

ack figures in the following table give the TOTAL safe uniformly distributed load-carrying capacities, in pounds per linear foot, of H Series Steel Joists. The weight of DEAD loads, including the joists, must be deducted to determine the LIVE load carrying capacities of the joists. The load table may be used for parallel chord joists installed to a maximum slope of ½ inch per foot.

The figures shown in blue in this load table are the LIVE loads per linear foot of joist which will produce an approximate deflection of 1/360 of the span. LIVE loads which will produce a deflection of 1/240 of the span may be obtained by multiplying the figures in blue by 1.5. In no case shall the total load capacity of the joists be exceeded.**

Tests on steel joists designed in accordance with the Standard Specifications have demonstrated that the Standard Load Tables are applicable for concentrated top chord loadings (such as are developed in bulb-tee roof construction) when the sum of the equal concentrated top chord loadings does not exceed the allowable uniform loading for the joist type and span and the loads are placed at spacings not exceeding 33″ along the top chord.

Allowable total safe loads in pounds per linear foot of H Series Steel Joists — for joist depths 8″ to 16″

JOIST TYPE	8H3	10H3	10H4	12H3	12H4	12H5	12H6	14H3	14H4	14H5	14H6	14H7	16H4	16H5	16H6	16H7	16H8
OVERALL DEPTH (inches)	8	10	10	12	12	12	12	14	14	14	14	14	16	16	16	16	16
RESISTING MOM. (inch-kips)	91	116	148	140	180	222	260	165	212	259	307	369	221	289	344	413	478
MAX. END. REAC. (pounds)	2400	2500	2800	2800	3200	3600	3900	3200	3500	3800	4200	4600	3800	4300	4600	4900	5200
MOM. OF INERTIA (inches⁴)	12.3	19.8	24.5	28.9	37.8	44.3	52.6	40.1	52.4	61.4	73.2	86.2	64.5	79.3	93.5	112.6	129.5
†APPROX. WEIGHT (lbs./ft.)	5.0	5.0	6.1	5.2	6.2	7.1	8.2	5.5	6.5	7.4	8.6	10.0	6.6	7.8	8.6	10.3	11.4
SPAN (ft.)																	
8	600	500	560	467	533	600	650	457	500	543	600	657	475	538	575	613	650
9	533	500	560	467	533	600	650	457	500	543	600	657	475	538	575	613	650
10	480	500	560	467	533	600	650	457	500	543	600	657	475	538	575	613	650
	460																
11	436	455	509	467	533	600	650	457	500	543	600	657	475	538	575	613	650
	345																
12	400	417	467	467	533	600	650	457	500	543	600	657	475	538	575	613	650
	266																
13	359	385	431	431	492	554	600	457	500	543	600	657	475	538	575	613	650
	209	337	417														
14	310	357	400	400	457	514	557	457	500	543	600	657	475	538	575	613	650
	167	270	334	393													
15	270	333	373	373	427	480	520	427	467	507	560	613	475	538	575	613	650
	136	219	271	320	418												
16	232	302	350	350	400	450	488	400	438	475	525	575	475	538	575	613	650
	112	181	223	264	345	404	480	366									
17		268	329	323	376	424	459	376	412	447	494	541	447	506	541	576	612
		151	186	220	287	337	400	305	398								
18		239	305	288	356	400	433	340	389	422	467	511	422	478	511	544	578
		127	157	185	242	284	337	257	336	393			413				
19		214	273	259	332	379	411	305	368	400	442	484	400	453	484	516	547
		108	133	157	206	241	286	218	285	334	399	470	351	432			
20		193	247	233	300	360	390	275	350	380	420	460	368	430	460	490	520
		92	114	135	177	207	246	187	245	287	342	403	301	370	437		
21				212	272	336	371	249	320	362	400	438	334	410	438	467	495
				117	152	179	212	162	212	248	295	348	260	320	377	454	
22				193	248	306	355	227	292	345	382	418	304	391	418	445	473
				101	133	155	185	141	184	215	257	302	226	278	328	395	454
23				176	227	280	328	208	267	326	365	400	279	364	400	426	452
				89	116	136	162	123	161	189	225	265	198	243	287	346	398
24				162	208	257	301	191	245	300	350	383	256	334	383	408	433
				78	102	120	142	108	142	166	198	233	174	214	253	304	350
25								176	226	276	327	368	236	308	367	392	416
								96	125	147	175	206	154	190	224	269	310
26								163	209	255	303	354	218	285	339	377	400
								85	111	131	156	183	137	169	199	239	275
27								151	194	237	281	337	202	264	315	363	385
								76	99	117	139	164	122	151	177	214	246
28								140	180	220	261	314	188	246	293	350	371
								68	89	104	125	147	110	135	159	192	220
29													175	229	273	327	359
													99	121	143	172	198
30													164	214	255	306	347
													89	110	129	156	179
31													153	200	239	287	332
													81	99	117	141	162
32													144	188	224	269	311
													74	90	107	128	148

† Approximate Weights per Linear Foot of steel joists only. Accessories not included.
†† For an approximate total load carrying capacity at a maximum allowable tensile stress of 22,000 psi, the total load carrying capacity shown in the load table should be multiplied by the ratio 22/30.
** Section 5.9 of the "Standard Specifications for Open Web Steel Joists, H Series" limits the design LIVE load deflection.

LOADS ABOVE THE COLORED LINES ARE GOVERNED BY SHEAR.

STEEL JOIST INSTITUTE MEMBER

Reviewed for Code Compliance
Inspections Division
Approved with Conditions
Date: 09/28/15

Hudson Design Group LLC

Beta & Gamma Sector Calculations

Reviewed for Code Compliance
Inspections Division
Approved with Conditions
Date: 09/28/15

7-07-2015

Name: Portland Harbor Terrace

Number: ME5048

Designed By: GH **Checked By:** MSC

Hudson Design Group LLC

BETA & GAMMA SECTOR

2.6.5.2 Velocity Pressure Coeff:

$K_z = 2.01\,(z/z_g)^{2/\alpha}$

$z=$	97.25	(ft)
$z_g=$	1200	(ft)
$\alpha=$	7	

$K_z=$ 0.980

$K_{zmin} \le K_z \le 2.01$

Table 2-4

Exposure	Z_g	α	K_{zmin}	K_e
B	1200 ft	7.0	0.70	0.9
C	900 ft	9.5	0.85	1.0
D	700 ft	11.5	1.03	1.1

2.6.6.4 Topographic Factor:

Table 2-5

Topo. Category	K_t	f
2	0.43	1.25
3	0.53	2.0
4	0.72	1.5

$K_{zt} = [1+(K_e\,K_t/K_h)]^2$

$K_h = e^{(f*z/H)}$

$K_{zt}=$ #DIV/0!

(If Category 1 then K_{zt} =1.0)

Category=	1

$K_h=$	#DIV/0!	
$K_e=$	0	(from Table 2-4)
$K_t=$	0	(from Table 2-5)
$f=$	0	(from Table 2-5)
$z=$	86.6	
$H=$	0	(Ht. of the crest above surrounding terrain)
$K_{zt}=$	1.00	

Reviewed for Code Compliance
Inspections Division
Approved with Conditions
Date: 09/28/15

7-07-2015

Name: Portland Harbor Terrace

Number: ME5048

Designed By: GH **Checked By:** MSC

Hudson Design Group LLC

2.6.7 Gust Effect Factor

2.6.7.1 Self Supporting Lattice Structures

Gh = 1.0 Latticed Structures > 600 ft

Gh = 0.85 Latticed Structures 450 ft or less

Gh = 0.85 + 0.15 [h/150 - 3.0] h= ht. of structure

h=	102	Gh=	0.85

2.6.7.2 Guyed Masts	Gh=	0.85
2.6.7.3 Pole Structures	Gh=	1.1
2.6.9 Appurtenances	Gh=	1.0

2.6.7.4 Structures Supported on Other Structures

(Cantilivered tubular or latticed spines, pole, structures on buildings (ht. : width ratio > 5)

Gh=	1.35	**Gh=**	**1.35**

Reviewed for Code Compliance
Inspections Division
Approved with Conditions
Date: 09/28/15

7-07-2015
Name: Portland Harbor Terrace
Number: ME5048
Designed By: GH **Checked By:** MSC

Hudson Design Group LLC

2.6.9.2 Design Wind Force on Appurtenances

$$F = qz*Gh*(EPA)_A$$

$$q_z = 0.00256*K_z*K_{zt}*K_d*V_{max}^2*I$$

K_z=	0.980
K_{zt}=	1.0
K_d=	0.95
V_{max}=	100
I=	1.0

q_z= 23.84

Table 2-2

Structure Type	Wind Direction Probability Factor, Kd
Latticed structures with triangular, square or rectangular cross sections	0.85
Tubular pole structures, latticed structures with other cross sections, appurtenances	0.95

Determine Cf:

If lattice Structure See Manual

If Tubular Pole Structure, Use Corrected Value from Table 2.7 Below

C mph.ft	Round	18 Sided	16 Sided	12 Sided	8 Sided
< 32 (Subcritical)	1.2	1.2	1.2	1.2	1.2
32 to 64 (Transitional)	$38.4/C^{1.0}$	$25.8/C^{0.885}$	$12.6/C^{0.678}$	$2.99/C^{0.263}$	1.2
> 64 (Supercritical)	0.6	0.65	0.75	1	1.2

$$C = (I*K_{zt}*K_z)^{0.5}*V*D$$

D = Outside diameter for rounds: 0.25 feet

C= 24.35 **Cf=** 1.2

Reviewed for Code Compliance
Inspections Division
Approved with Conditions
Date: 09/28/15

7-07-2015
Name: Portland Harbor Terrace
Number: ME5048
Designed By: GH **Checked By:** MSC

Hudson Design Group LLC

Determine Ca:

Table 2-8

Force Coefficients (Ca) for Appurtenances				
Member Type		**Aspect Ratio ≤ 2.5**	**Aspect Ratio = 7**	**Aspect Ratio ≥ 25**
		Ca	**Ca**	**Ca**
Flat		1.2	1.4	2.0
Round	**C < 32** (Subcritical)	0.7	0.8	1.2
	32 ≤ C ≤ 64 (Transitional)	$3.76/(C^{0.485})$	$3.37/(C^{0.415})$	$38.4/(C^{-1.0})$
	C > 64 (Supercritical)	0.5	0.6	0.6

Aspect Ratio is the overall length/width ratio in the plane normal to the wind direction.
(Aspect ratio is independent of the spacing between support points of a linear appurtenance, and the section length considered to have uniform wind load).

Note: Linear interpolation may be used for aspect ratios other than those shown.

Appurtenances	Height	Width	Depth	Flat Area	Aspect Ratio	Ca	Force (lbs)
Powerwave 7770	55.0	11.0	5.0	**4.20**	5.00	1.31	**177**
SBNH-1D6565C	96.4	11.9	7.1	**7.97**	8.10	1.44	**368**
P65-17-XLH-RR	96.0	12.0	6.0	**8.00**	8.00	1.43	**369**
HPA-65R-BUU-H8	92.4	14.8	7.4	**9.50**	6.24	1.37	**418**
RRUS-11	19.7	17.0	7.2	**2.33**	1.16	1.20	**90**
Square Squid	20.1	18.2	6.4	**2.54**	1.10	1.20	**98**

Reviewed for Code Compliance
Inspections Division
Approved with Conditions
Date: 09/28/15

ICE WEIGHT CALCULATIONS

ME5048 - Portland Harbor Terrace

Thickness of ice:	1	in.
Density of ice:	56	pcf

7770 Antenna

Weight of ice based on total radial SF area:

Depth (in):	5	
height (in):	55	
Width (in):	11	
Total weight of ice on object:		57 lbs
Weight of object:	35	lbs
Combined weight of ice and object:		**92 lbs**

RRUS-11 RRH

Weight of ice based on total radial SF area:

Depth (in):	7.2	
height (in):	19.7	
Width (in):	17	
Total weight of ice on object:		31 lbs
Weight of object:	51	lbs
Combined weight of ice and object:		**82 lbs**

SBNH-1D6565C Antenna

Weight of ice based on total radial SF area:

Depth (in):	7.1	
height (in):	96.4	
Width (in):	11.9	
Total weight of ice on object:		119 lbs
Weight of object:	61	lbs
Combined weight of ice and object:		**180 lbs**

A2 Module

Weight of ice based on total radial SF area:

Depth (in):	3.4	
height (in):	16.4	
Width (in):	15.2	
Total weight of ice on object:		20 lbs
Weight of object:	22	lbs
Combined weight of ice and object:		**42 lbs**

P65-17-XLH-RR Antenna

Weight of ice based on total radial SF area:

Depth (in):	6	
height (in):	96	
Width (in):	12	
Total weight of ice on object:		112 lbs
Weight of object:	70	lbs
Combined weight of ice and object:		**182 lbs**

DC6-48-60-18 Squid

Weight of ice based on total radial SF area:

Depth (in):	6.4	
height (in):	20.1	
Width (in):	18.2	
Total weight of ice on object:		32 lbs
Weight of object:	43.5	lbs
Combined weight of ice and object:		**76 lbs**

HPA-65R-BUU-H8 Antenna

Weight of ice based on total radial SF area:

Depth (in):	7.4	
height (in):	92.4	
Width (in):	14.8	
Total weight of ice on object:		133 lbs
Weight of object:	73	lbs
Combined weight of ice and object:		**206 lbs**

LGP21401 TMA

Weight of ice based on total radial SF area:

Depth (in):	2.7	
height (in):	14.4	
Width (in):	9	
Total weight of ice on object:		11 lbs
Weight of object:	19	lbs
Combined weight of ice and object:		**30 lbs**

2-3/8" Pipe

Per foot weight of ice:

diameter (in):	2.38	
Per foot weight of ice on object:		**3 plf**

Reviewed for Code Compliance
Inspections Division
Approved with Conditions
Date: 09/28/15

7/8/2015
.: ME5084
me: Portland Harbor Terrace
Done by: GH **Checked by:** MSC

Hudson Design Group LLC

CHECK CONNECTION CAPACITY

Reference: Hilti HIT-HY 70 Hybrid Adhesive for Masonry

Epoxy Type = HIT-HY70
Anchor Diameter = 3/8 in.
Embedment Depth = 3-1/2 in. (Min.)

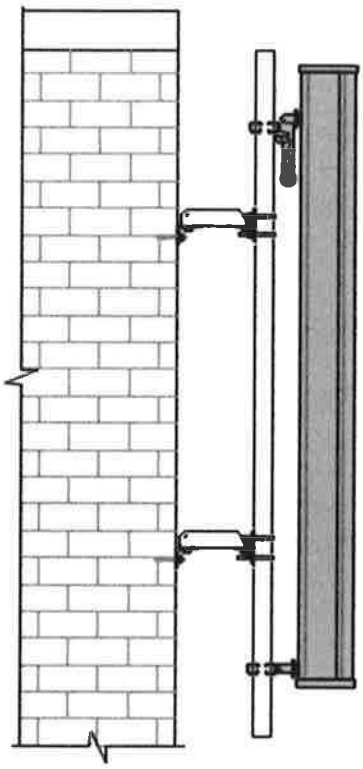

Allowable Tensile Load =

F_{Tall} = 915 lbs.

Allowable Shear Load =

F_{Vall}= 870 lbs.

WIND FORCES

Reaction **F =** 210 lbs.
(Worst Case, See StruCalc)

GRAVITY LOADS

Ice and Equipment 270 lbs.

No. of Supports = 2
No. of Anchors / Support = 2

Tension Design Load / Anchor =

f_t= 105.00 lbs. < 915 lbs. **Therefore, OK !**

Shear Design Load / Anchor=

f_v= 67.50 lbs. < 870 lbs. **Therefore, OK !**

CHECK COMBINED TENSION AND SHEAR

f_t / F_T	+	f_v / F_V	≤	1.0			
0.115	+	0.078	=	0.192	<	1.0	**Therefore, OK !**