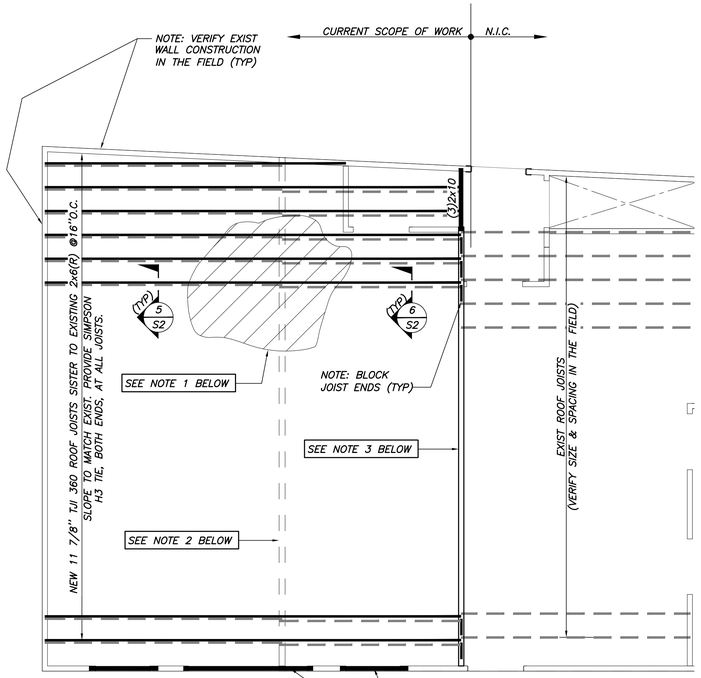

EXIST ROOF FRAMING PLAN

1/4"=1'-0"

NOTES:

1. FIRE DAMAGED EXIST ROOF DECK EXTENTS UNKNOWN. REPLACE W/ADVANTECH SHTG TO MATCH EXIST THICKNESS. SQUARE OFF AREA AND PROVIDE FULL SHTS TO THE GREATEST EXTENT POSSIBLE.
2. EXIST BEARING WALL TO BE REMOVED. SHORE ALL EXIST CONSTRUCTION AS REQD TO REMOVE WALL & INSTALL NEW RAFTERS.
3. NEW BEARING WALL 2x6 @16" O.C. W/(3)2x6 TOP & BOT PLATE. BLOCK EXIST JOISTS IN ADJACENT BAY TO TOP PLATE.

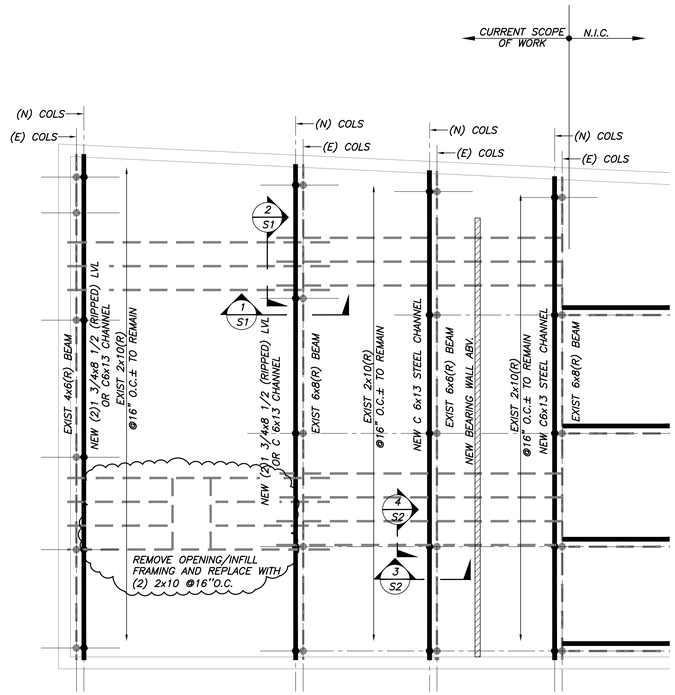

EXIST FIRST FLOOR FRAMING PLAN

1/4"=1'-0"

NOTES:

1. (R) INDICATES EXIST FRAMING IS ROUGH SAWN.
2. (N) COL INDICATES NEW 3 1/2" CONC FILLED LALLY COL.
3. (E) COL INDICATES EXIST 3 1/2" LALLY COL.
4. SISTER ANY AND ALL DAMAGED JOISTS WITH (2) 2x10. FASTEN W/(2) ROWS OF 10d NAILS @12"O.C. APPLY CONSTRUCTION ADHESIVE TO INTERFACE BETWEEN MEMBERS

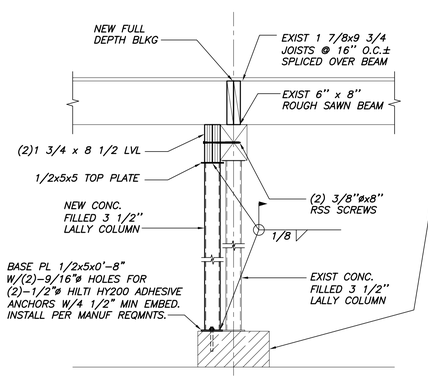

SECTION 1/S1

3/4"=1'-0"

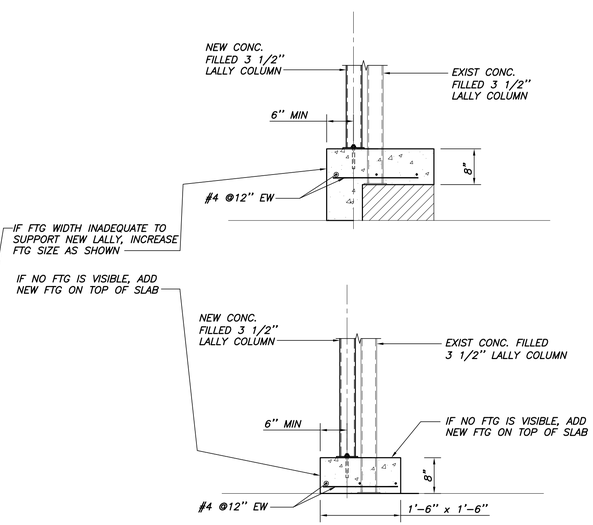

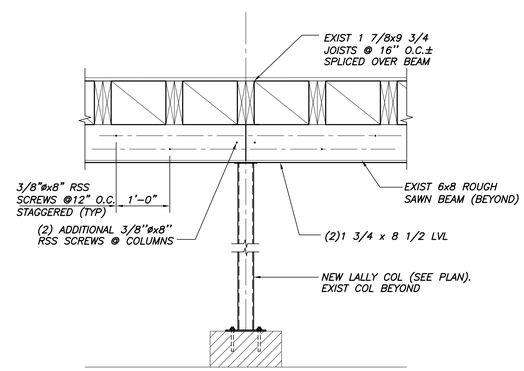

SECTION 2/S1

3/4"=1'-0"

THIS DRAWING IS AN INSTRUMENT OF SERVICE AND SHALL REMAIN THE PROPERTY OF BECKER STRUCTURAL ENGINEERS INC. IT SHALL NOT BE REPRODUCED, COPIED, LENT OR DISPOSED OF DIRECTLY OR INDIRECTLY NOR USED FOR ANY PURPOSE OTHER THAN FOR WHICH IT IS SPECIFICALLY FURNISHED AND MUST BE RETURNED TO BECKER STRUCTURAL ENGINEERS INC. ON COMPLETION OF WORK, IF REQUESTED.

GENERAL NOTES

1. THE FOLLOWING NOTES ARE INTENDED TO BE USED AS OUTLINED SPECIFICATIONS FOR THIS PROJECT. THE REFERENCED STANDARDS ARE CONSIDERED TO BE PART OF THE WORK.
2. STRUCTURAL DRAWINGS SHALL BE USED IN CONJUNCTION WITH ARCHITECTURAL DRAWINGS, AND COORDINATED WITH MECHANICAL, ELECTRICAL, PLUMBING TRADES. COORDINATE WITH ARCHITECTURAL DRAWINGS FOR LOCATIONS AND DIMENSIONS OF OPENINGS, CHASES, INSERTS, REGLETS, SLEEVES, DEPRESSIONS, AND OTHER DETAILS NOT SHOWN ON STRUCTURAL DRAWINGS.
3. ALL DIMENSIONS AND CONDITIONS MUST BE VERIFIED IN THE FIELD. ANY DISCREPANCIES SHALL BE BROUGHT TO THE ATTENTION OF THE ARCHITECT BEFORE PROCEEDING WITH THE AFFECTED PART OF THE WORK.
4. THE STRUCTURE IS DESIGNED TO BE SELF SUPPORTING AND STABLE ONLY AFTER THE STRUCTURAL WORK CONTAINED IN THE STRUCTURAL DRAWINGS IS COMPLETED. IT IS THE CONTRACTOR'S SOLE RESPONSIBILITY TO DETERMINE ERECTION PROCEDURES AND SEQUENCE TO ENSURE THE SAFETY OF THE BUILDING AND ITS COMPONENTS DURING ERECTION. THIS INCLUDES THE ADDITION OF NECESSARY SHORING, SHEETING, TEMPORARY BRACING, GUYS OR TIEDOWNS. SUCH MATERIAL SHALL REMAIN THE PROPERTY OF THE CONTRACTOR AFTER COMPLETION OF THE PROJECT.
5. SECTIONS AND DETAILS SHOWN ON ANY STRUCTURAL DRAWINGS SHALL BE CONSIDERED TYPICAL FOR SIMILAR CONDITIONS AS DETERMINED BY THE ENGINEER.
6. ALL APPLICABLE FEDERAL, STATE, AND MUNICIPAL REGULATIONS SHALL BE FOLLOWED, INCLUDING THE FEDERAL DEPARTMENT OF LABOR OCCUPATIONAL SAFETY AND HEALTH ACT (OSHA).

DESIGN LOADS

1. BUILDING CODE:
   MAINE UNIFORM BUILDING AND ENERGY CODE
   INTERNATIONAL BUILDING CODE, 2009 EDITION
   INTERNATIONAL EXISTING BUILDING CODE, 2009 EDITION
   ASCE 7-05 MINIMUM DESIGN LOADS FOR BUILDINGS AND OTHER STRUCTURES
2. DESIGN FLOOR LIVE LOADS (IBC TABLE 1607.1):
   STORES/RETAIL, FIRST FLOOR: 100 PSF
   DINING ROOMS & RESTAURANTS: 100 PSF
3. DESIGN ROOF SNOW LOAD:
   GROUND SNOW LOAD (Pg): 60 PSF
   SNOW EXPOSURE FACTOR (Ce): 1.0
   SNOW LOAD IMPORTANCE FACTOR (Is): 1.0
   SNOW LOAD THERMAL FACTOR (Ct): 1.1
   FLAT ROOF SNOW LOAD (Pf): 46.1 PSF + DRIFT
4. LATERAL LOAD RESISTING SYSTEM (WIND & SEISMIC)
   LATERAL LOAD RESISTING SYSTEM IS UNMODIFIED AND THEREFORE UPGRADES ARE NOT REQUIRED.

TIMBER NOTES

1. ALL TIMBER FRAMING SHALL BE IN ACCORDANCE WITH THE AITC TIMBER CONSTRUCTION MANUAL-LATEST EDITION, AND THE AF & PA NATIONAL DESIGN SPECIFICATION FOR WOOD CONSTRUCTION (NDS) LATEST EDITION.
2. INDIVIDUAL TIMBER FRAMING MEMBERS SHALL BE VISUALLY GRADED. MINIMUM GRADE NO1/NO2 SPRUCE-PINE-FIR KILN DRIED TO 19% MAXIMUM MOISTURE CONTENT UNLESS OTHERWISE INDICATED ON THE DRAWINGS.
3. ENGINEERED WOOD PRODUCTS SHALL BE AS SPECIFIED ON THE DRAWINGS. REFER TO MANUFACTURER'S LITERATURE FOR PROPER HANDLING AND INSTALLATION GUIDELINES. MANUFACTURER AND PRODUCT SHALL BE:

   TRUS-JOIST: I-JOIST (TJI), PARALLAM (PSL), MICROLAM (LVL), TIMBERSTRAND (LSL)
   BOISE: I-JOIST (BCI), VERSALAM (LVL)
4. SUBSTITUTIONS OF ENGINEERED WOOD MATERIALS OTHER THAN THOSE SPECIFIED WILL BE PERMITTED ONLY WITH WRITTEN CERTIFICATION FROM THE MANUFACTURER THAT SUBSTITUTED ITEMS "MEETS OR EXCEED" ALL PROPERTIES OF SPECIFIED PRODUCT, INCLUDING ENGINEERING AND DURABILITY CHARACTERISTICS. SUBSTITUTIONS ARE SUBJECT TO APPROVAL BY THE ARCHITECT AND ENGINEER.
5. PRESSURE TREATED LUMBER SHALL BE USED FOR SILL MEMBERS, EXTERIOR EXPOSURE, OR WHERE SHOWN ON THE DRAWINGS. TIMBER SHALL BE SOUTHERN YELLOW PINE TREATED WITH CCA OR ACQ TO 0.4 #/CF IN ACCORDANCE WITH AWPA C-18. ACZA IS STRICTLY PROHIBITED.
6. ALL BUILT-UP BEAMS AND COLUMNS SHALL BE NAILED AS FOLLOWS (FASTENING IN EACH PLY):

   UNIFORMLY LOADED BEAMS:
   BEAM DEPTH <16" - 2 ROWS OF 16d NAILS AT 12" O.C., STAGGERED
   BEAM DEPTH >=16" - 3 ROWS OF 16d NAILS AT 12" O.C. STAGGERED
   NOTE: SIDE LOADED BEAMS REQUIRE ADDITIONAL FASTENING. SEE DETAILS.

   COLUMNS:
   2-10d NAILS AT 6" O.C.
7. FASTENING NOT SPECIFIED SHALL CONFORM WITH IBC (2009) TABLE 2304.9.1. NAIL FASTENERS SHALL MEET THE REQUIREMENTS OF ASTM F1667. UNLESS NOTED OTHERWISE, NAILS REFERENCED ON DRAWINGS ARE TO BE COMMON NAILS WITH DIMENSIONS AS FOLLOWS:

   8d: 2 1/2" LONG BY 0.131" DIAMETER SHANK WITH 0.281" DIAMETER HEAD
   10d: 3" LONG BY 0.148" DIAMETER SHANK WITH 0.312" DIAMETER HEAD
   12d: 3 1/4" LONG BY 0.148" DIAMETER SHANK WITH 0.312" DIAMETER HEAD
   16d: 3 1/2" LONG BY 0.162" DIAMETER SHANK WITH 0.344" DIAMETER HEAD

(TIMBER NOTES CONTINUED)

8. ALL TIMBER CONNECTION HARDWARE (JOIST HANGERS, POST BASES, SHEARWALL HOLDOWNS, ETC) SHALL BE AS INDICATED ON THE DRAWINGS AND MANUFACTURED BY SIMPSON STRONG-TIE. ALL CONNECTION HARDWARE SHALL BE HOT-DIPPED GALVANIZED G-90 (U.N.O.). CONNECTION HARDWARE USED IN CONTACT WITH PRESERVATIVE TREATMENT SHALL BE GALVANIZED G185 (ZMAX) USE FASTENERS AND HANGERS OF SAME MATERIAL & COATING. REFER TO MANUFACTURER'S LITERATURE FOR PROPER HANDLING AND INSTALLATION GUIDELINES.
9. FASTENERS USED IN CONTACT WITH PT LUMBER SHALL BE HOT DIPPED GALVANIZED (ASTM A153), STAINLESS STEEL, OR OTHER FINISH AS APPROVED BY THE ENGINEER.

CONCRETE NOTES

1. CONCRETE WORK SHALL CONFORM TO "BUILDING CODE REQUIREMENTS FOR REINFORCED CONCRETE (ACI 318 LATEST)," AND "SPECIFICATIONS FOR STRUCTURAL CONCRETE (ACI 301-LATEST)". THESE PUBLICATIONS ARE AVAILABLE THROUGH THE AMERICAN CONCRETE INSTITUTE (248) 848-3800.
2. CONCRETE SHALL BE CONTROLLED CONCRETE, PROPORTIONED, MIXED, AND PLACED IN ACCORDANCE WITH THE PROVISIONS SET FORTH IN ACI 318-LATEST.
3. CONCRETE MIX DESIGN:

   LOCAL FOOTING REINFORCEMENT:
   A. STRENGTH: 3000 PSI @ 28 DAYS
   B. AGGREGATE: 3/4"
   C. W/C RATIO: 0.55 MAX
   D. ENTRAPPED AIR ONLY (NO ENTRAINMENT)
   E. SLUMP: 4" MAX
   F. ADDITIONAL SLUMP MAY BE ACHIEVED BY THE ADDITION OF A MIDRANGE OR HIGH RANGE WATER REDUCING ADMIXTURE. MAXIMUM SLUMP AFTER ADDITION OF ADMIXTURE SHALL BE 6 INCHES AND 8 INCHES RESPECTIVELY.
5. ADJUSTMENT TO CONCRETE MIXES: MIX ADJUSTMENTS MAY BE REQUESTED BY THE CONTRACTOR, WHEN CHARACTERISTICS OF THE MATERIALS, JOB CONDITIONS, WEATHER OR OTHER CIRCUMSTANCES WARRANT, AT NO ADDITIONAL COST TO THE OWNER AS ACCEPTED BY THE ARCHITECT. LABORATORY TEST DATA FOR THE REVISED MIX DESIGN AND STRENGTH DATA MUST BE SUBMITTED AND ACCEPTED BY THE ARCHITECT BEFORE INCORPORATING INTO THE WORK.
6. WATER MAY BE ADDED AT THE PROJECT ONLY IF THE MAXIMUM SPECIFIED WATER-CEMENT RATIO AND SLUMP ARE NOT EXCEEDED. CONTRACTOR SHALL HAVE BATCH TICKET INDICATING WATER AND CEMENT MIXED IN THE PLANT, AND SHALL RECORD THE WATER ADDED AS EVIDENCE THAT THE WATER-CEMENT RATIO
6. REINFORCING BARS SHALL CONFORM TO ASTM A615 GRADE 60 DEFORMED BARS AND SHALL BE DETAILED, FABRICATED AND PLACED IN ACCORDANCE WITH ACI 315, LATEST EDITION.
7. MINIMUM CONCRETE PROTECTIVE COVERING FOR REINFORCEMENT, UNLESS NOTED OTHERWISE, SHALL BE AS FOLLOWS:

   A. SURFACES CAST AGAINST AND PERMANENTLY IN CONTACT WITH EARTH: 3.0"
   B. FORMED SURFACES IN CONTACT WITH EARTH OF EXPOSED TO WEATHER :1.5"
   C. SURFACES NOT IN CONTACT WITH EARTH OR EXPOSED TO WEATHER WALLS: 1.0"
8. INSTALLATION OF REINFORCEMENT SHALL BE COMPLETE AT LEAST 24 HOURS PRIOR TO THE SCHEDULED CONCRETE PLACEMENT. NOTIFY ARCHITECT AND STRUCTURAL ENGINEER OF COMPLETION AT LEAST 24 HOURS PRIOR TO THE SCHEDULED COMPLETION OF THE INSTALLATION OF REINFORCEMENT.

CITY OF PORTLAND MAINE
RESURGAM
Reviewed for Code Compliance
Inspections Division
Approved with Conditions
Date: 01/31/14

BEC STRUCTURAL
75 York Street, 207.879.1838

STATE OF MAINE
PAUL B. BECKER
NO. 6554
LICENSED
PROFESSIONAL ENGINEER

Rev. No	Date	Issued For	Appvd
1	1/15/13	REVISION FOR CHANNELS	X

211 DANFORTH STREET
PORTLAND, ME 04102

FRAMING PLANS & DETAILS

Designed PCH	Scale NOTED
Drawn PCH	Date 01/14/14
Checked EAR	Becker Job Number 3241

S1