Reviewed for Code Compliance
Inspections Division
Approved with Conditions

Date: 01/05/15

CLEARANCES

1. In selecting a location for installation, it is necessary to provide adequate accessibility clearances for servicing and proper installation.
2. Unit is supported by a wall bracket secured to the wall.
3. The minimum clearances from casing to combustible construction is 48" (121cm) on top, 6" (152mm) on each side and 4" (102mm) from the floor or from the top surface of carpeting, tile or other floor covering and 0" (0mm) to rear wall.
4. The minimum distance from the center of the vent cap to the nearest outside corner or obstruction is 24" (610mm).
5. The DV-25 and DV-35 minimum wall depth is 4 1/2" (114mm) (and the maximum is 13" (330mm). The maximum wall depth may be extended to 19" (483mm) using the model DV-1190 extended flue kit. The use of tubes not supplied by the manufacturer results in unsatisfactory performance.

The vent terminal of a direct vent app
(14.6 KW) BTU per hour or less shall b
from any opening through which flue
The bottom of the vent terminal and
at least 12" (305mm) above grade.

WARNING: The nearest point of the vent cap should be a minimum horizontal distant of six (6) (1.83m) feet from any pressure regulator. In case of regulator malfunction, the six (6) (1.83m) feet distance will reduce the chance of gas entering the vent cap.

INSTALLATION INSTRUCTIONS

Location of Furnace

Pick a location on an outside wall with a clear space of 28" (711mm) high by 49" (124cm) wide in the room.

Locating Wall Opening

The furnace is to be located on an outside wall. Locate wall studs so that wall opening will be located between wall studs. The wall studs can be used for attachment of wall mounting bracket. The wall opening required as shown in Figure 3 is a diameter of 7 1/2 inches (191mm).

A template is provided in furnace carton for positioning furnace on the wall. Also, refer to Figure 3 for positioning the furnace on wall and for locating gas line connection.

Figure 3 will position the furnace four inches (102mm) off the floor. If it is desired to position the furnace higher on the wall, add the difference to the "A," "B" and "C" dimensions.

Note: The vent opening is not in the center of the furnace.

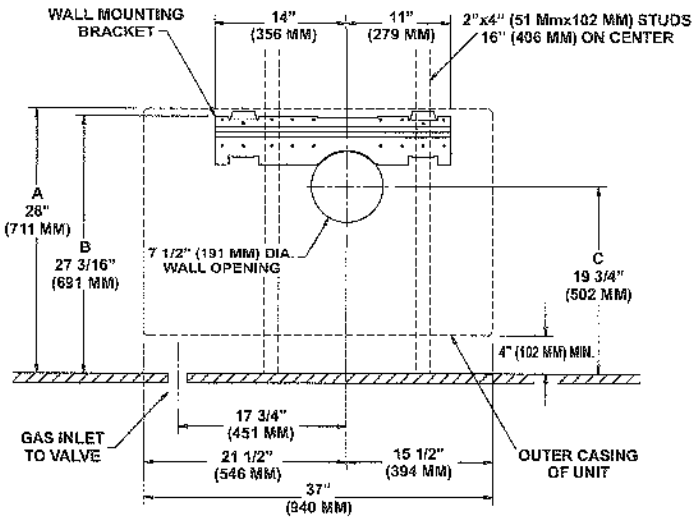

Figure 3

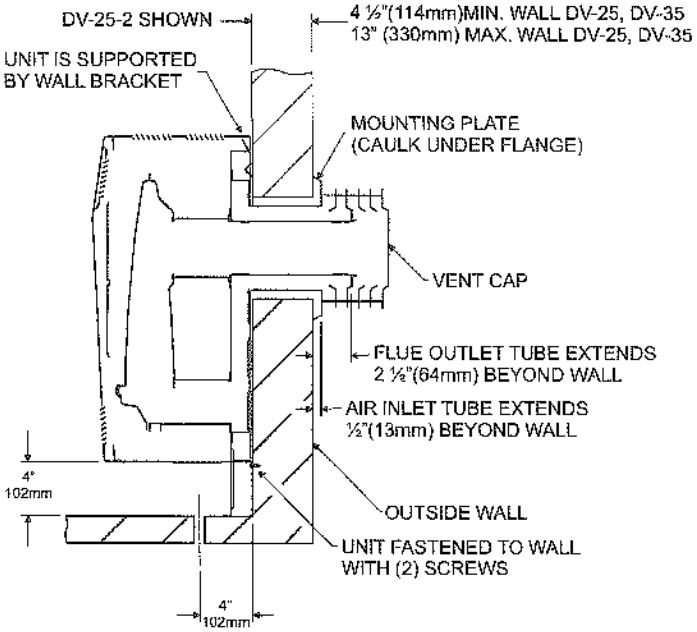

Figure 4

Installing Wall Mounting Bracket

Locate and cut wall opening. If there is insulation above the wall opening (air inlet tube) a barrier should be installed above the wall opening (air inlet tube) to prevent insulation from coming in contact with the air inlet tube. The barrier must not penetrate into the 7 1/2" (191mm) diameter wall opening. Place the flat surface of the wall mounting bracket toward the wall. Insert half round flange of wall mounting bracket into and at the top of the wall opening. The half round flange of the wall mounting bracket must be in contact with the sheetrock or wood at the top of the wall opening. Level the wall mounting bracket in the wall opening.

INSTALLATION INSTRUCTIONS (continue

Reviewed for Code Compliance
Inspections Division
Approved with Conditions

Date: 01/05/15

On solid wall, when using wall studs for attachment of wall mounting bracket, fasten wall mounting bracket to wall studs with (2) #10 x 1 1/2" (38mm) screws provided and fasten (2) additional #10 x 1 1/2" (38mm) screws provided through the wall mounting bracket and into the solid wall.

On sheet rock, when using wall studs for attachment of wall mounting bracket, fasten wall mounting bracket to wall studs with (2) #10 x 1 1/2" (38mm) screws provided and by using wall opening for access, fasten 2 additional #10 x 1 1/2" (38mm) screws and (2) Tinnerman nuts provided through the wall mounting bracket and into the sheet rock.

Attaching Furnace To Wall Mounting Bracket
Hang furnace on wall mounting bracket by aligning (2) tabs on wall mounting bracket with (2) slots located on inner casing top.

The inner casing bottom is to be fastened to the wall. On solid wall, fasten inner casing bottom with (2) #10 x 1 1/2" (38mm) screws provided. On sheet rock wall, fasten inner casing bottom with (2) toggle bolts provided.

Cutting Vent Tubes
This is the most important part of the installation. With the furnace installed on wall the 6" (152mm) diameter air inlet tube and the 4" (102mm) diameter flue outlet tube are to be marked and cut using the following procedure.

1. Attach 6" (152mm) diameter air inlet tube onto the collar of air drop assembly. Be sure 6" (152mm) diameter air inlet tube is placed as far as possible onto the collar of the air drop assembly. Mark the 6" (152mm) diameter air inlet tube 1/2" (13mm) beyond the outside wall. Remove 6" (152mm) diameter air inlet tube from collar of air drop assembly.
2. Attach 4" (102mm) diameter flue outlet tube onto flue outlet collar on combustion chamber. Be sure 4" (102mm) diameter flue outlet tube is placed as far as possible onto the collar of flue outlet. Mark the 4" (102mm) diameter flue outlet tube 2 1/2" (64mm) beyond the outside wall. Remove 4" (102mm) diameter flue outlet tube from collar of flue outlet on combustion chamber.
3. Mark or wrap tape completely around the tubes at the marked points to help in making a true cut. Do not crimp or enlarge tubes.

Installing Vent Assembly

1. Place caulking (not provided) beneath the edge of the outside mounting plate. Use additional caulking to correct uneven wall surface, such as clapboard.
2. Attach 6" (152mm) diameter air inlet tube onto the collar of air drop assembly. Attach caulked, outside mounting plate into the 6" (152mm) diameter air inlet tube. Position the outside mounting plate so that 6" (152mm) diameter air inlet tube has a slight downward slope to the outside. The downward slope is necessary to prevent the entry of rainwater. Attach outside mounting plate to exterior wall with (4) #10 x 1 1/2" (38mm) screws provided.
3. Apply furnace cement to 4" (102mm) diameter flue outlet collar on combustion chamber and to 4" (102mm) diameter collar on vent cap. Attach 4" (102mm) diameter flue outlet tube onto flue outlet collar on combustion chamber. Attach vent cap into the 4" (102mm) diameter flue outlet tube. Attach vent cap to outside mounting plate with (3) #10 x 1/2" (13mm) screws provided.
4. Installation is completed.

Reassembly And Resealing Vent-Air
When vent-air intake system is remove the following steps will assure proper re the vent-air intake assembly.

1. Remove old furnace cement from flue chamber and collar of vent cap. R from both ends of 4" (102mm) diameter flue outlet tube.
2. Remove old caulking beneath the edge of the outside mounting plate. Apply new caulking beneath the edge of the outside mounting plate. Use additional caulking to correct uneven wall surface, such as clapboard.
3. Attach 6" (152mm) diameter air inlet tube onto the collar of air drop assembly. Attach caulked, outside mounting plate into the 6" (152mm) diameter air inlet tube. Position the outside mounting plate so that 6" (152mm) diameter air inlet tube has a slight downward slope to the outside. The downward slope is necessary to prevent the entry of rainwater. Attach outside mounting plate to exterior wall with (4) #10 x 1 1/2" (38mm) screws provided.
4. Apply furnace cement to 4" (102mm) diameter flue outlet collar on combustion chamber and to 4" (102mm) diameter collar on vent cap. Attach 4" (102mm) diameter flue outlet tube onto flue outlet collar on combustion chamber. Attach vent cap into the 4" (102mm) diameter flue outlet tube. Attach vent cap to outside mounting plate with (3) #10 x 1/2" (13mm) screws provided.
5. Reassembly and resealing vent-air intake system is completed.

INSTALLATION INSTRUCTIONS (contin

Installing a Vent Near a Window Ledge, Other Type of Projection or on Siding (vinyl, aluminum, etc.)

Direct vent furnaces are designed to be installed on a uniform outside wall. When the wind comes from any angle (up, down or from either side), it must hit the vent cap equally over both the air inlet and the flue outlet portions of the vent. Any wall projection, such as a door or window casing, which disturbs the wind on one side of the air inlet section will result in back pressure on the flue section smothering the flame and eventual pilot outage.

When the vent cap is to be installed on siding or it appears that a projection within 6" (152mm) of any side of the air inlet section could shield the air inlet section, the entire vent should be supported away from the wall at least the distance of the projection. 2" x 4" (51mm x 102mm) framing whose outside dimensions match the overall dimensions of the mounting plate is recommended. The 2" x 4" (51mm x 102mm) framing protects siding from possible warpage or discoloration. All joints can then be sealed and painted. The wall depth plus the additional depth of the 2" x 4" (51mm x 102mm) framing should not exceed a total depth of 13" (330mm) for DV-25 and DV-35. (See Figure 5)

Vinyl siding vent kit, DV-822, is available from Empire Comfort Systems, Inc. The depth is 3" (76mm), which enables the vent cap to be extended away from siding or projections. The wall depth plus the additional 3" (76mm) depth of the vinyl siding vent cap extension should not exceed a total depth of 13" (330mm) for DV-25 and DV-35. (See Figure 5a)

Warning: When vinyl siding vent k
x 102mm) framing is added to an ex
installed) do not attempt to add sect
tube or air inlet tube. An air tight se
Refer to Parts List, page 16 to orde

Reviewed for Code Compliance
Inspections Division
Approved with Conditions

Date: 01/05/15

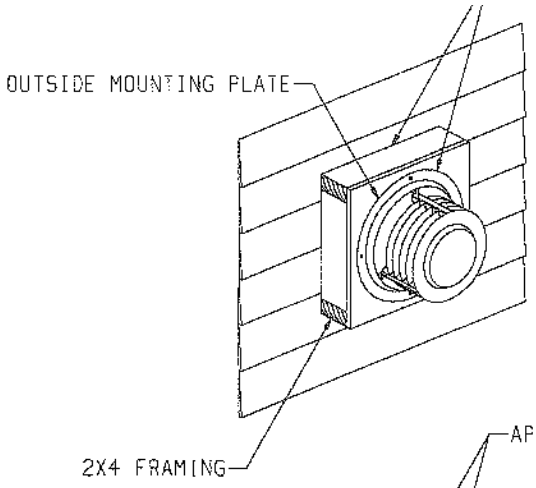

Figure 5

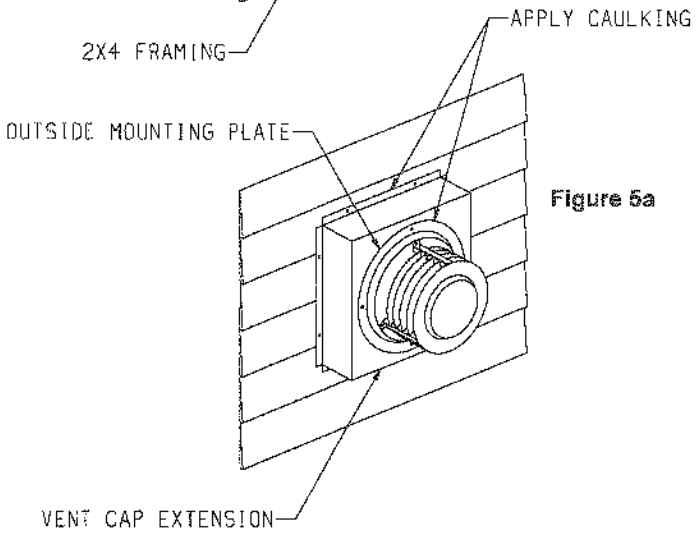

Figure 5a