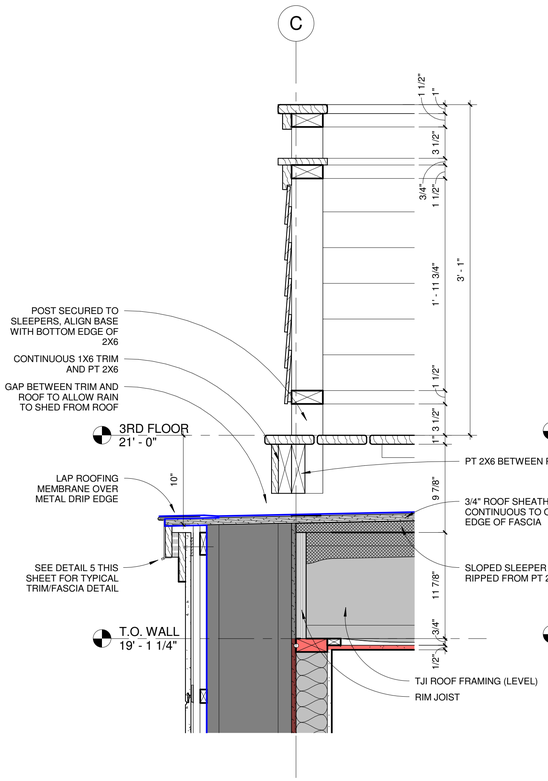

1 DETAIL - DRIP EDGE AT ROOF DECK
1 1/2" = 1'-0"

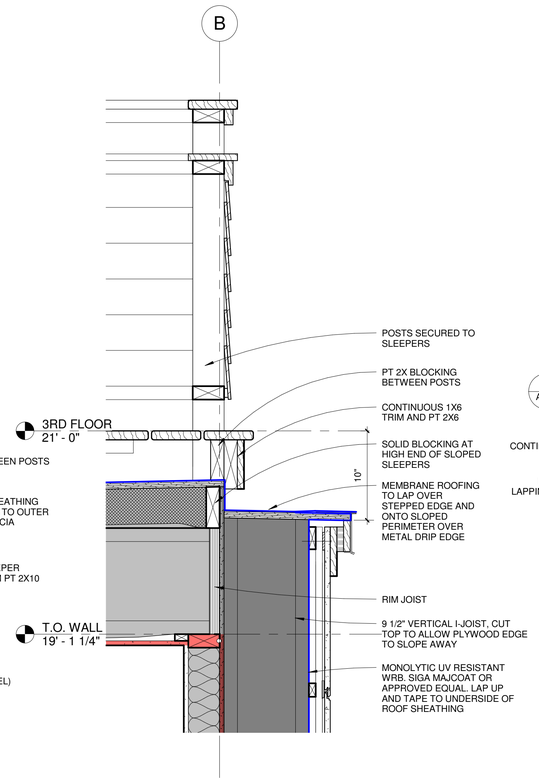

2 DETAIL - HIGH EDGE AT ROOF DECK
1 1/2" = 1'-0"

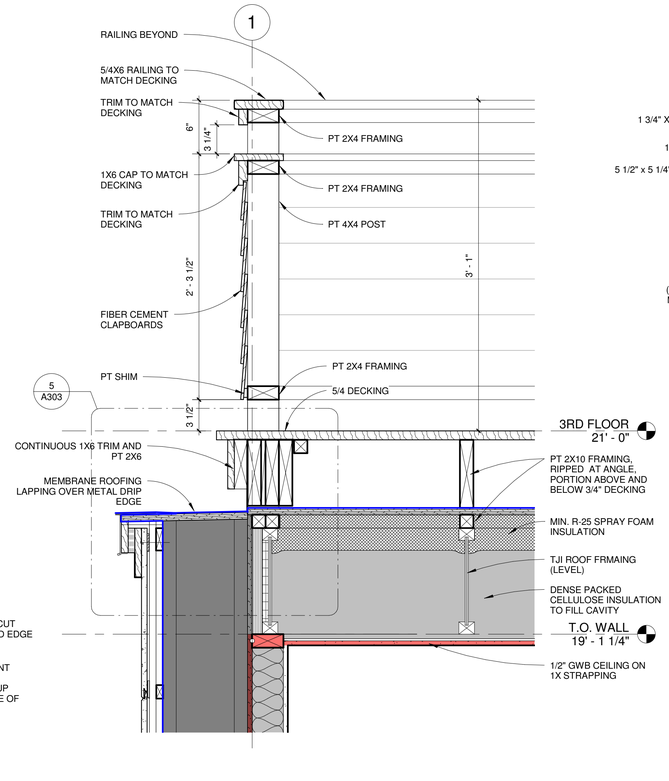

3 DETAIL - FLAT ROOF EDGE
1 1/2" = 1'-0"

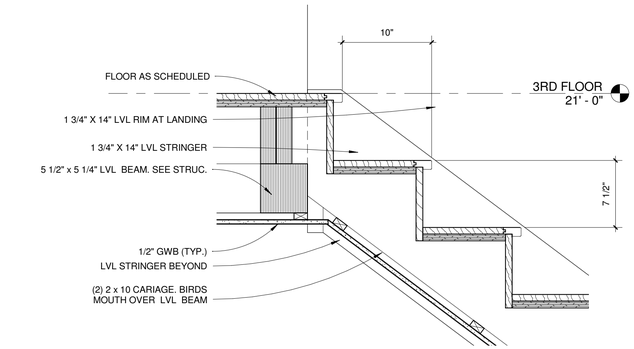

6 STAIR SECTION AT 3RD FLOOR
1 1/2" = 1'-0"

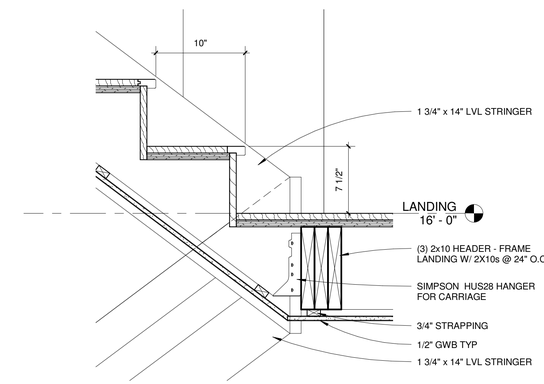

7 STAIR SECTION AT LANDING
1 1/2" = 1'-0"

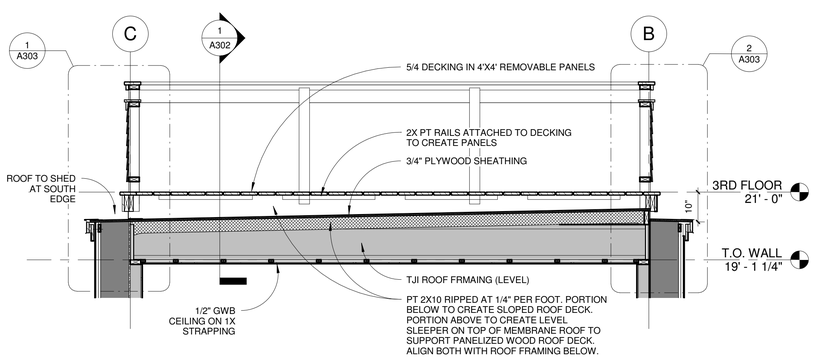

4 FLAT ROOF SECTION
1/2" = 1'-0"

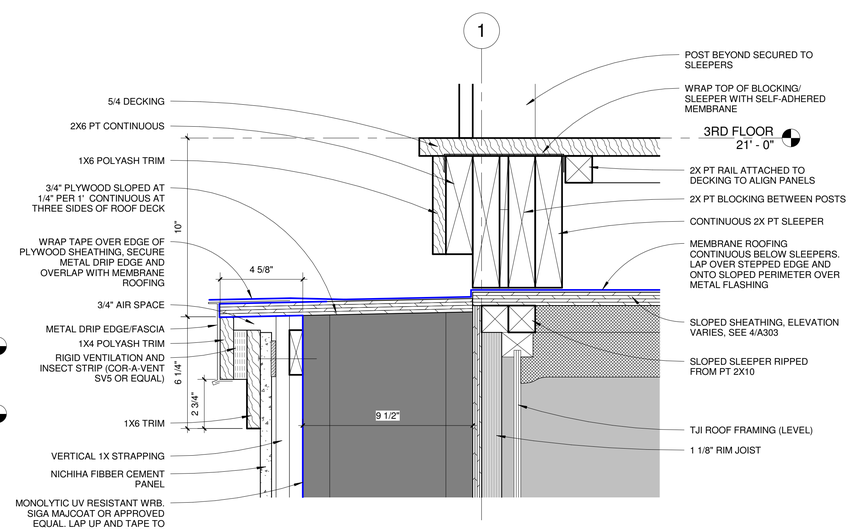

5 DETAIL -SHELF AT ROOF DECK
3" = 1'-0"

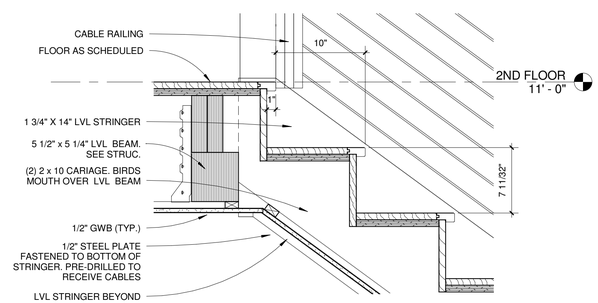

8 STAIR SECTION AT 2ND FLOOR
1 1/2" = 1'-0"

LICENSED ARCHITECT
CHRISTOPHER M. BRILEY
No. 2788
STATE OF MAINE

OLINS RESIDENCE

2 TAYLOR STREET
PORTLAND, MAINE

BRLBURN architecture for life
23 Maple St | Suite 202 | Portland, ME 04101 | 207-774-6462

CONSULTANTS:

STRUCTURAL ENGINEER:
L&L STRUCTURAL ENGINEERING
6 Q STREET
SOUTH PORTLAND, ME 04106

REVISIONS:

ISSUED:	10/15/14
PROJECT No:	1314
DRAWN BY:	RIP
CHECKED BY:	CMB

SHEET TITLE:
SECTION DETAILS

A303