PLAN NORTH

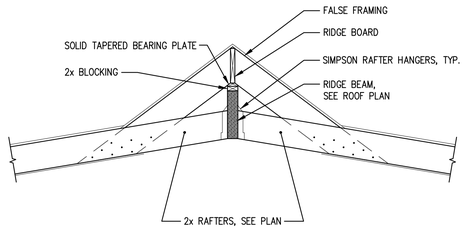

1 SECTION 1/2" = 1'-0"

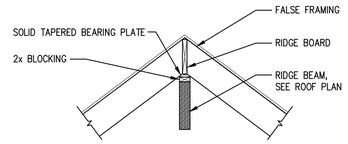

2 SECTION 1/2" = 1'-0"

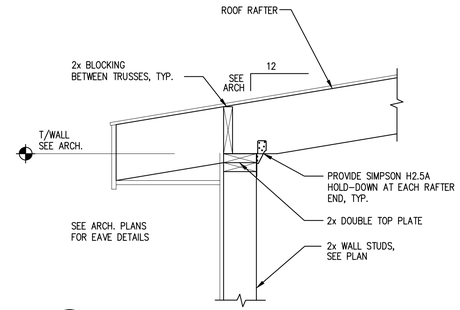

3 SECTION 1" = 1'-0"

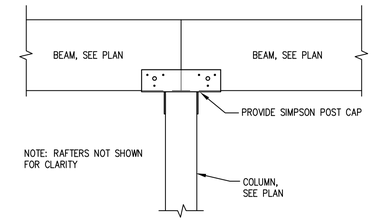

4 SECTION 1" = 1'-0"

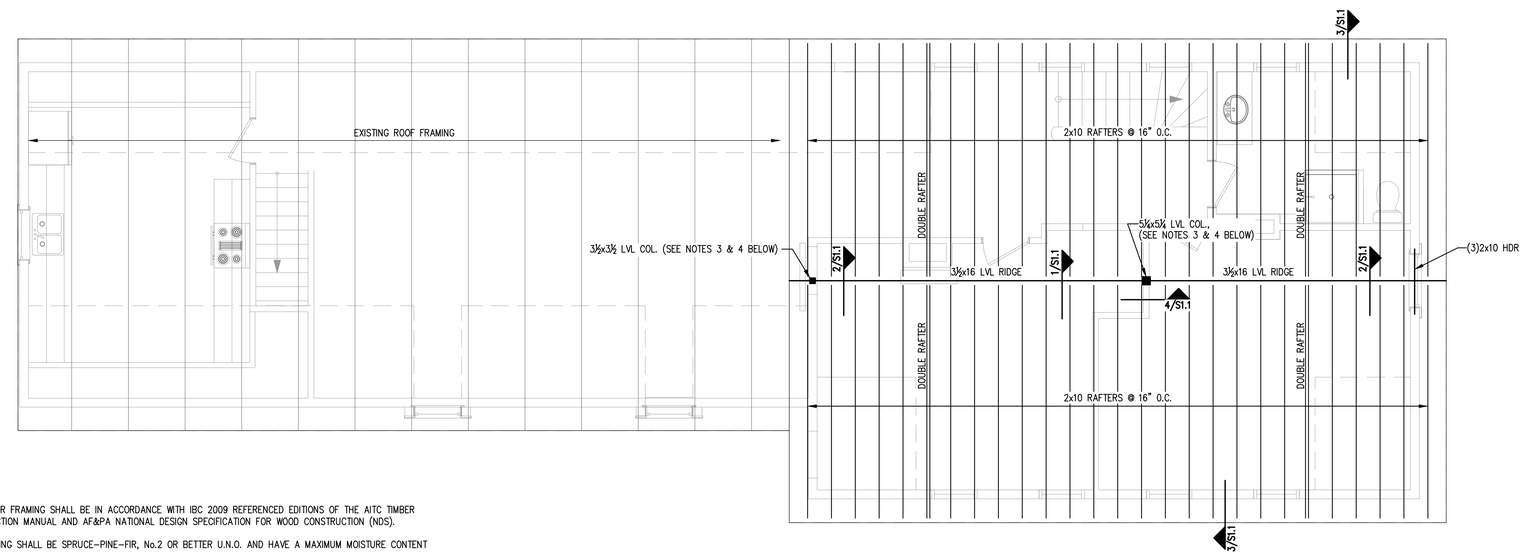

GENERAL NOTES:

1. REFERENCE ARCHITECTURAL PLANS FOR DIMENSIONS NOT SHOWN. REFERENCE MECHANICAL, ELECTRICAL, AND ARCHITECTURAL PLANS FOR SIZES AND LOCATIONS OF WALL AND SLAB OPENINGS, DUCTS, PIPING, CURBS, AND EQUIPMENT PADS. IN THE EVENT OF A CONFLICT BETWEEN THE DRAWINGS, SPECIFICATIONS, OR NOTES ON THE DRAWINGS, THE ENGINEER SHALL BE NOTIFIED PRIOR TO CONSTRUCTION.
2. EXISTING DIMENSIONS AND CONDITIONS ARE FOR REFERENCE ONLY. CONTRACTOR SHALL VERIFY ALL EXISTING CONSTRUCTION AND DIMENSIONS IN THE FIELD PRIOR TO CONSTRUCTION OR FABRICATION. ALL DISCREPANCIES SHALL BE REPORTED TO THE ENGINEER PRIOR TO COMMENCING WORK.
3. THE CONTRACTOR SHALL NOTIFY THE ENGINEER IF DEVIATIONS OR CHANGES ARE REQUIRED TO THE CONTRACT DOCUMENTS OR APPROVED SHOP DRAWINGS DUE TO INTERFERENCES, FABRICATION ERRORS, OR OTHER CAUSES.
4. THE STRUCTURE IS SELF-SUPPORTING AND STABLE AFTER THE ENTIRE BUILDING IS COMPLETELY CONSTRUCTED. THE CONTRACTOR IS SOLELY RESPONSIBLE FOR ERECTION PROCEDURES AND SEQUENCING DURING CONSTRUCTION AND ERECTION TO PROVIDE AND ENSURE LOCAL AND OVERALL STABILITY OF THE BUILDING AND ITS COMPONENTS DURING CONSTRUCTION AND ERECTION. THE CONTRACTOR SHALL RETAIN A LICENSED STRUCTURAL ENGINEER TO DESIGN TEMPORARY BRACING/SHORING AND DETERMINE WHERE THE TEMPORARY BRACING/SHORING IS NEEDED.
5. THE CONTRACTOR SHALL BE RESPONSIBLE FOR ERECTION PROCEDURES, SEQUENCING AND FOR COMPLYING WITH ALL APPLICABLE SAFETY REGULATIONS DURING THE WORK.
6. ONE ELECTRONIC COPY OR TWO SETS OF HARD COPIES OF SHOP DRAWINGS SHALL BE SUBMITTED TO THE ENGINEER. ONE HARD COPY WILL BE RETURNED TO THE CONTRACTOR AND ONE HARD COPY WILL BE RETAINED BY THE ENGINEER.
7. REFERENCE THE PROJECT SPECIFICATIONS FOR MATERIAL, WORKMANSHIP AND ADDTIONAL INFORMATION NOT COVERED IN THESE NOTES (WHERE APPLICABLE)

DESIGN CRITERIA:

1. BUILDING CODES:
   INTERNATIONAL BUILDING CODE (IBC), 2009 EDITION
   ASCE 7-05 MINIMUM DESIGN LOADS FOR BUILDING AND OTHER STRUCTURES
   MAINE UNIFORM BUILDING AND ENERGY CODE
2. LIVE LOADS:
   FIRST FLOOR LIVING AREAS = 40 PSF
   SECOND FLOOR SLEEPING AREAS = 30 PSF
3. SNOW LOADS:
   GROUND SNOW LOAD (Pg) = 60 PSF
   SNOW EXPOSURE FACTOR (Ce) = 1.0
   SNOW LOAD IMPORTANCE FACTOR (Is) = 1.0
   THERMAL FACTOR (Ct) = 1.1
   FLAT ROOF SNOW LOAD (Pf) = 46.2 PSF + DRIFT

LATERAL DESIGN NOT PREFORMED BY CASCO BAY ENGINEERING

WOOD NOTES:

1. ALL TIMBER FRAMING SHALL BE IN ACCORDANCE WITH IBC 2009 REFERENCED EDITIONS OF THE AITC TIMBER CONSTRUCTION MANUAL AND AF&PA NATIONAL DESIGN SPECIFICATION FOR WOOD CONSTRUCTION (NDS).
2. ALL FRAMING SHALL BE SPRUCE-PINE-FIR, No.2 OR BETTER U.N.O. AND HAVE A MAXIMUM MOISTURE CONTENT OF 19%.
3. ALL WOOD IN CONTACT WITH MASONRY OR CONCRETE OR EXPOSED TO WEATHER SHALL BE PRESSURE TREATED (PT) SOUTHERN YELLOW PINE.
4. WHERE "LVL" IS NOTED ON DRAWINGS, PROVIDE LAMINATED VENEER LUMBER, WHICH HAS THE FOLLOWING MINIMUM ALLOWABLE STRESSES:

   Fb = 2600 PSI Fc = 2510 PSI (PARALLEL TO GRAIN)
   Fv = 285 PSI Fc = 750 PSI (PERPENDICULAR TO GRAIN)
   Ft = 1555 PSI E = 2,000,000 PSI

5. ALL ENGINEERED LUMBER THAT IS EXPOSED TO WEATHER SHALL BE WOLMANIZED.
6. ALL ROOF SHEATHING (5/8") AND WALL SHEATHING (1/2") SHALL BE APA PERFORMANCE-RATED. ATTACH TO SUPPORTED PANEL EDGES WITH 8d NAILS AT 6" o.c. AND AT INTERMEDIATE SUPPORTS WITH 8d NAILS AT 12" o.c. U.N.O. SEE DRAWINGS FOR MORE STRINGENT NAILING REQUIREMENTS AT WOOD SHEAR WALLS.
7. SHEATHING SHALL BE ORIENTED WITH LONG DIMENSION PERPENDICULAR TO THE SUPPORTS AND BE CONTINUOUS OVER TWO OR MORE SUPPORTS. STAGGER ALL JOINTS & PROVIDE ADEQUATE JOINT SPACING (1/8" TYP) AS RECOMMENDED BY MANUFACTURER.
8. PROVIDE FULL DEPTH BLOCKING AT ENDS AND INTERIOR SUPPORTS OF ALL JOISTS AND RAFTERS WHERE JOISTS AND RAFTERS FRAME OVER SUPPORTS. PROVIDE 1x3 DIAGONAL BRIDGING OR FULL DEPTH SOLID BLOCKING FOR EACH 8'-0" OF SPAN FOR ALL JOISTS AND RAFTERS.
9. WHERE BEAMS ARE LABELED ON PLAN, DO NOT SPLICE BEAM NOR ANY PLY OF BEAM BETWEEN SUPPORTS.
10. ALL CONNECTION HARDWARE SHALL BE BY SIMPSON STONG-TIE (OR APPROVED EQUIVALENT) AND SHALL BE HOP-DIPPED GALVANIZED. HARDWARE IN CONTACT WITH PRESSURE TREATED (PT) LUMBER SHALL BE GALVANIZED G185 (ZMAX). REFER TO MANUFACTURERS LITERATURE FOR PROPER INSTALLATION GUIDELINES.
11. FASTENERS USED IN CONTACT WITH PRESSURE TREATED (PT) LUMBER SHALL BE HOT-DIPPED GALVANIZED, STAINLESS STEEL, OR OTHER FINISH APPROVED BY ENGINEER.
12. ALIGN COLUMNS SUCH THAT COLUMNS BEAR CONTINUOUSLY TO FOUNDATION SUPPORT. INSTALL ADDITIONAL SOLID BLOCKING WITHIN FLOOR PACKAGE TO PROVIDE CONTINUITY OF LOAD PATH.
13. PROVIDE HORIZONTAL BLOCKING FOR ALL LOAD BEARING WALLS AT 4'-0" O.C. VERTICAL, MAXIMUM.

PLAN NOTES:

1. PROVIDE SIMPSON RAFTER HANGERS AT ALL RAFTER ENDS, TYP.
2. WINDOW HEADERS SHALL BE (3)-2x8's, U.N.O.
3. COLUMNS ARE CONTINUOUS TO BASEMENT, PROVIDE SOLID BLOCKING WITHIN FLOOR PACKAGES. NOTIFY ENGINEEER IF ANY COLUMN CAN NOT BE CONTINUOUS TO BASEMENT AS HEADERS WILL BE REQUIRED AND FOOTING SIZES MAY CHANGE.
4. PROVIDE 2'-0"x2'-0" SQUARE x 10" THICK FOOTING W/ (3) #4 REBAR EACH WAY, BOTTOM IN BASEMENT UNDER COLUMNS

PLAN LEGEND

- BEARING WALL
- SHEAR WALL
- BEAM
- HSS COLUMN
- COLUMN FROM ABOVE
- COLUMN BELOW
- COLUMN ABOVE AND BELOW
- HOLD-DOWN

ROOF FRAMING PLAN AND DETAILS

SCALE: 1/4"=1'-0" -

PRINTED: Dec 14, 2015

CASCO BAY ENGINEERING
424 Fore Street
Portland, ME 04101
Phone 207.842.2800
Fax 207.842.2828
www.cascobayengineering.com

CLIENT:
DAVID MATERO ARCHITECTURE
100 FRONT STREET
BATH, ME

STATE OF MAINE ANTHONY DUMAIS No. 12851 LICENSED PROFESSIONAL ENGINEER

SPRING STREET APARTMENTS
PORTLAND ME
REMODEL

ISSUED

No.	DESCRIPTION	DR. BY	CKD. BY	DATE
0	ISSUED FOR CONSTRUCTION	CD	TD	12/14/15

SHEET TITLE:
ROOF FRAMING PLAN AND DETAILS

DESIGNED:	TD
DRAWN:	CD
DATE:	12-11-15
PROJECT NUMBER:	15-193

S1.1