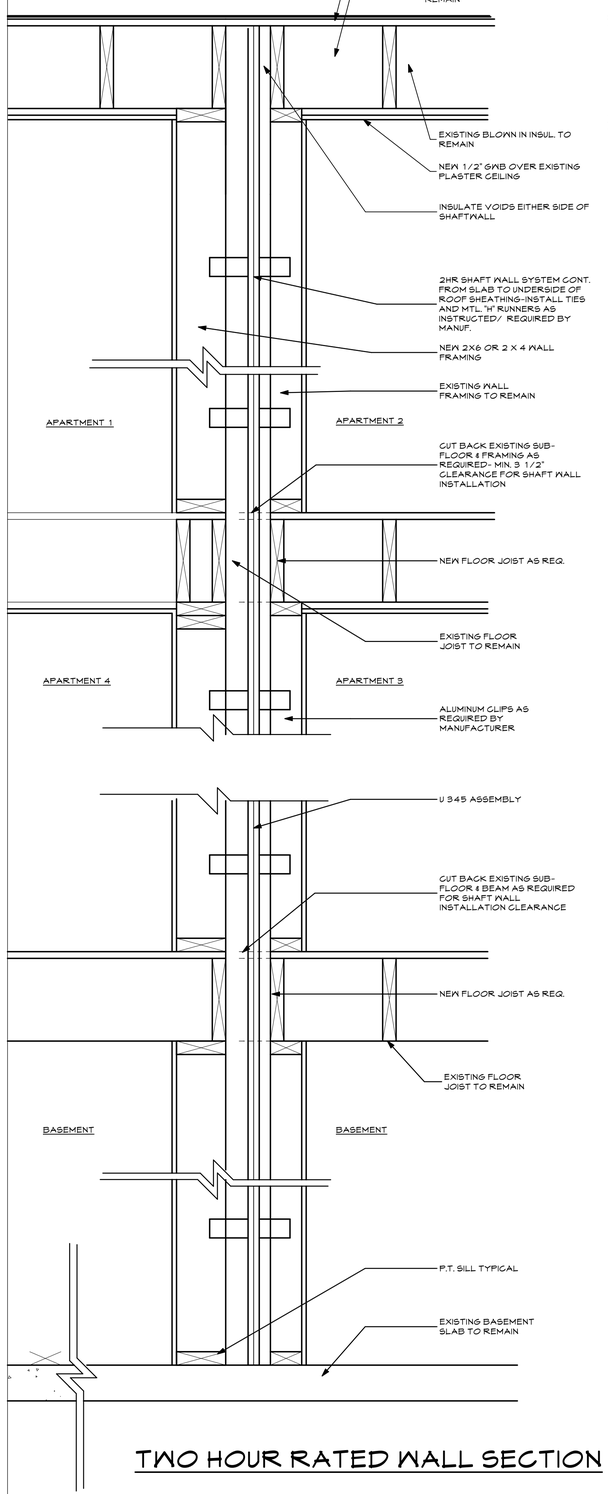

TWO HOUR RATED WALL SECTION

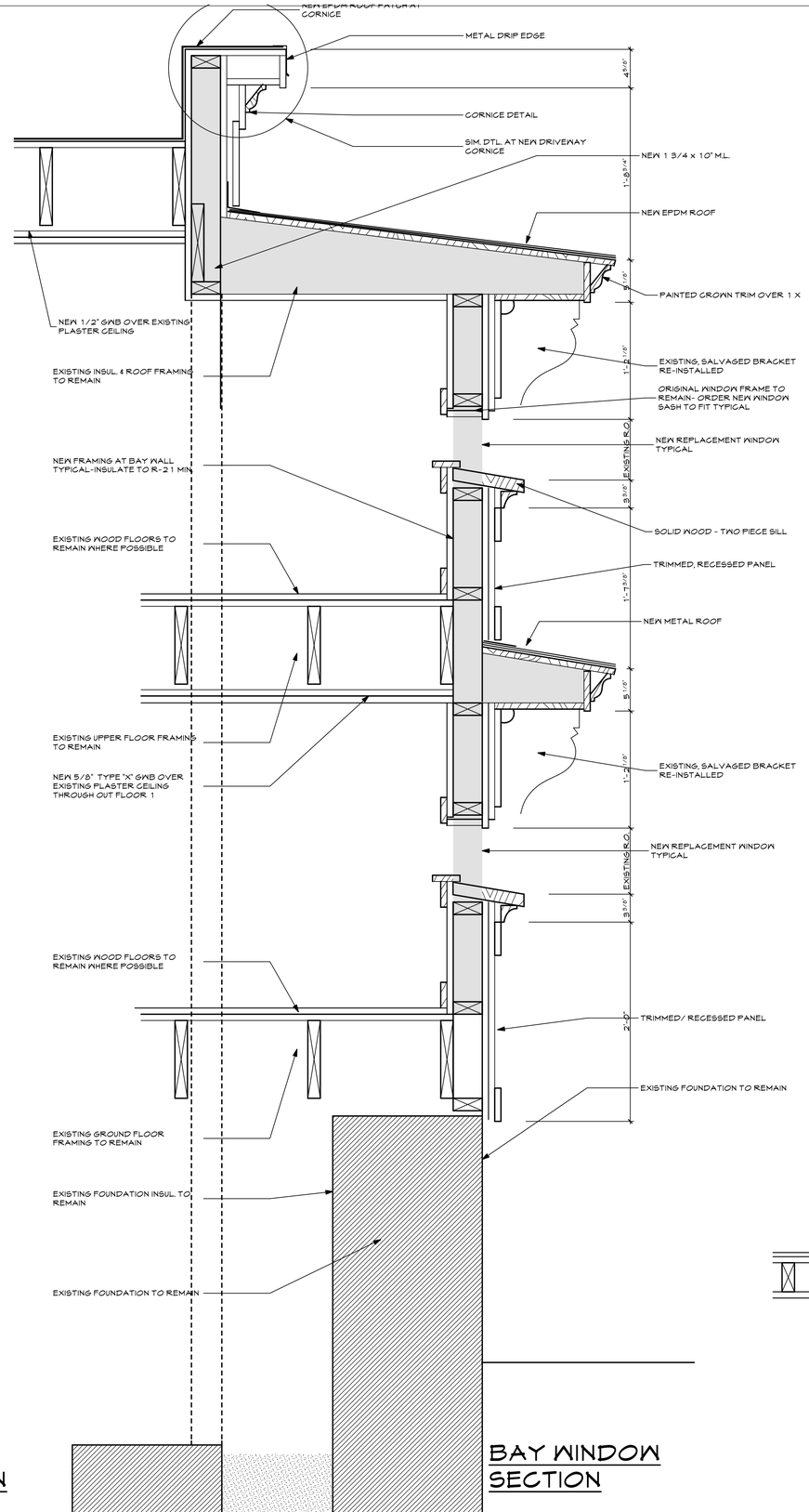

BAY WINDOW SECTION

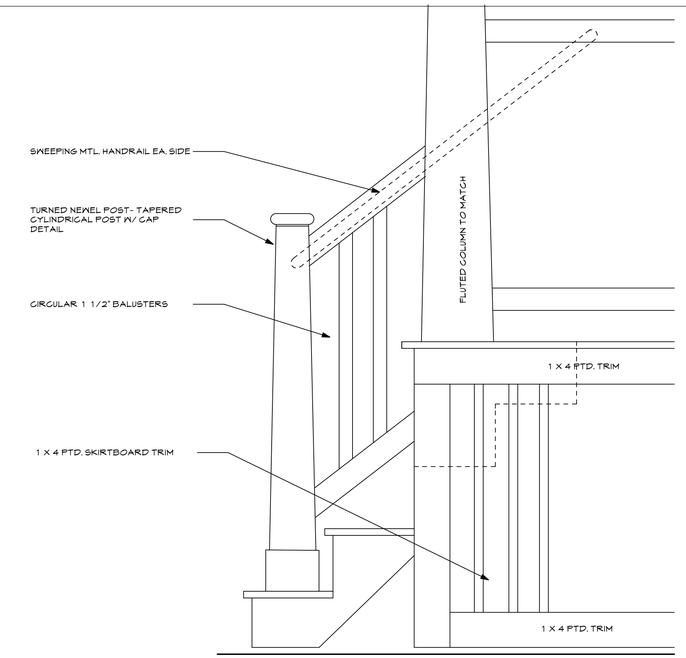

ENTRY PORCH STAIR SECTION

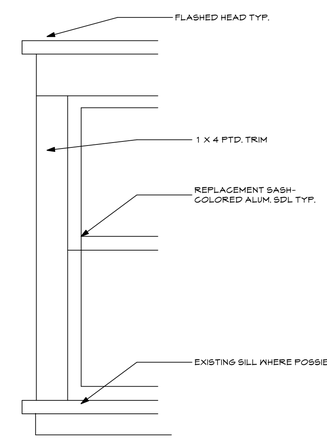

WINDOW TRIM

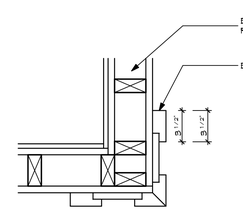

CORNER TRIM

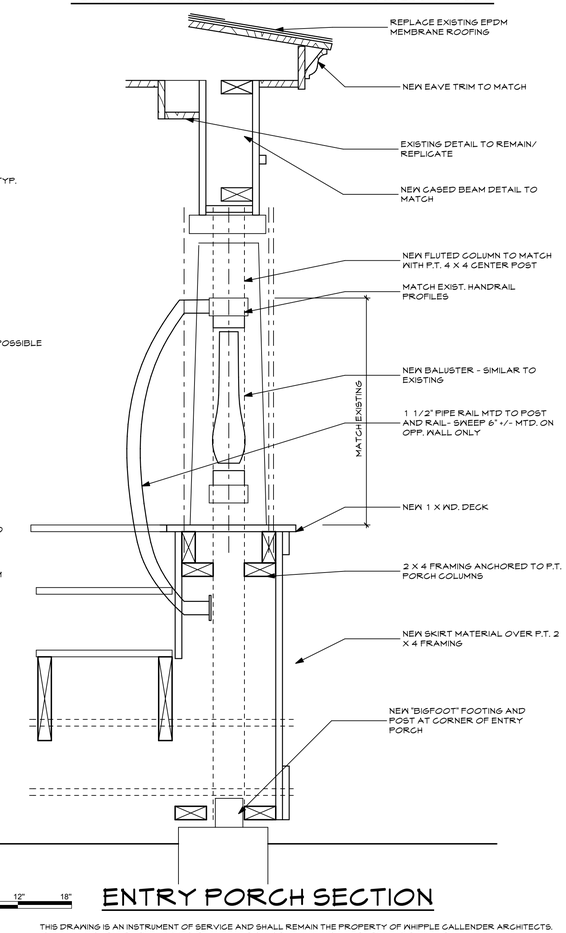

0 6" 12" 18"

ENTRY PORCH SECTION

THIS DRAWING IS AN INSTRUMENT OF SERVICE AND SHALL REMAIN THE PROPERTY OF WHIPPLE CALLENDER ARCHITECTS. IT SHALL NOT BE USED FOR ANY OTHER PURPOSE THAT FOR WHICH IT IS SPECIFICALLY FURNISHED

13 LEWIS STREET

13 LEWIS STREET PORTLAND, MAINE

WHIPPLE — CALLENDER ARCHITECTS

136 PLEASANT AVE.
PORTLAND, ME 04103
P 207.775.2696
F 207.775.3631
www.whipplecallender.com

MARK	DATE	DESCRIPTION

DATE: 11.5.13
CHECKED BY: JAD
DRAWN BY: initials
JOB: ##-XXX
SHEET TITLE: WALL SECTIONS/ DETAILS

A3.3