# DOOR AND FRAME SCHEDULE

| No. | DOOR SIZE W | DOOR SIZE H | DOOR SIZE T | DOOR MAT | DOOR TYPE | DOOR GLASS | DOOR LOUVER W | DOOR LOUVER H | FRAME MAT | FRAME TYPE | FRAME DETAILS HEAD | FRAME DETAILS JAMB | FRAME DETAILS SILL | FIRE RATING | HDW SET | REMARKS |
|---|---|---|---|---|---|---|---|---|---|---|---|---|---|---|---|---|
| 001 | 3'-0" | 6'-8" | 1 3/4" | WD | D | – | – | – | MTL | – | B4 | B4 | – | 20 MIN | – | DOOR FINISH – PAINT CLOSER |
| 002 | 3'-0" | 6'-8" | 1 3/4" | WD | D | – | – | – | MTL | – | B4 | B4 | – | 20 MIN | – | DOOR FINISH – PAINT CLOSER |
| | | | | | | | | | | | | | | | | |
| 101 | 3'-0" | 6'-8" | 1 3/8" | WD | B | – | – | – | WD | – | B5 | B5 | – | – | – | DOOR FINISH – PAINT |
| 102 | 3'-0" | 6'-8" | 1 3/8" | WD | B | – | – | – | WD | – | B5 | B5 | – | – | – | DOOR FINISH – PAINT |
| 103 | 2'-6" | 6'-8" | 1 3/8" | WD | B | – | – | – | WD | – | B5 | B5 | – | – | – | DOOR FINISH – PAINT |
| 104 | 3'-0" | 6'-8" | 1 3/4" | MTL | A | – | – | – | WD | – | B5 SIM | B5 SIM | MTL | – | – | DOOR FINISH – PAINT CLOSER, WEATHERSTRIPPING |
| 105 | 3'-0" | 6'-8" | 1 3/4" | WD | B | – | – | – | MTL | – | B4 | B4 | B6 | 20 MIN | – | DOOR FINISH – PAINT CLOSER, ELEC. HOLD OPEN |
| 106 | – | – | – | – | – | – | – | – | – | – | – | – | – | – | – | DOOR FINISH – PAINT EXISTING TO REMAIN, NEW DR HARDWARE |
| 106A | 3'-0" | 6'-8" | 1 3/4" | WD | B | – | – | – | MTL | – | B4 | B4 | – | 20 MIN | – | DOOR FINISH – PAINT CLOSER |
| 107 | 3'-0" | 6'-8" | 1 3/4" | WD | B | – | – | – | MTL | – | B4 | B4 | B6 | 20 MIN | – | DOOR FINISH – PAINT CLOSER |
| | | | | | | | | | | | | | | | | |
| 201 | 3'-0" | 6'-8" | 1 3/8" | WD | B | – | – | – | WD | – | B5 | B5 | – | – | – | DOOR FINISH – PAINT |
| 202 | 4'-0" | 6'-8" | 1 3/8" | WD | C | – | – | – | WD | – | B5 | B5 | – | – | – | DOOR FINISH – PAINT |
| 203 | 3'-0" | 6'-8" | 1 3/8" | WD | B | – | – | – | WD | – | B5 | B5 | – | – | – | DOOR FINISH – PAINT |
| 204 | 5'-0" | 6'-8" | 1 3/8" | WD | C | – | – | – | WD | – | B5 | B5 | – | – | – | DOOR FINISH – PAINT |
| 205 | 3'-0" | 6'-8" | 1 3/8" | WD | B | – | – | – | WD | – | B5 | B5 | – | – | – | DOOR FINISH – PAINT |
| 206 | 4'-0" | 6'-8" | 1 3/8" | WD | C | – | – | – | WD | – | B5 | B5 | – | – | – | DOOR FINISH – PAINT |
| 207 | 3'-0" | 6'-8" | 1 3/4" | WD | B | – | – | – | MTL | – | B4 | B4 | – | 20 MIN | – | DOOR FINISH – PAINT CLOSER, ELEC HOLD OPEN |
| 208 | 3'-0" | 6'-8" | 1 3/8" | WD | B | – | – | – | WD | – | B5 | B5 | – | – | – | DOOR FINISH – PAINT |
| 209 | 2'-6" | 6'-8" | 1 3/8" | WD | B | – | – | – | WD | – | B5 | B5 | – | – | – | DOOR FINISH – PAINT |
| 210 | 3'-0" | 6'-8" | 1 3/4" | WD | B | – | – | – | MTL | – | B4 | B4 | B6 | 20 MIN | – | DOOR FINISH – PAINT CLOSER |
| 211 | 2'-6" | 6'-8" | 1 3/8" | WD | B | – | – | – | WD | – | B5 | B5 | – | – | – | DOOR FINISH – PAINT |
| | | | | | | | | | | | | | | | | |
| 301 | 3'-0" | 6'-8" | 1 3/4" | WD | B | – | – | – | MTL | – | B4 | B4 | B6 | 20 MIN | – | DOOR FINISH – PAINT CLOSER |
| 302 | 2'-6" | 6'-8" | 1 3/8" | WD | B | – | – | – | WD | – | B5 | B5 | – | – | – | DOOR FINISH – PAINT |
| 303 | 3'-0" | 6'-8" | 1 3/4" | WD | B | – | – | – | MTL | – | B4 | B4 | B6 | 20 MIN | – | DOOR FINISH – PAINT CLOSER |
| 304 | 2'-6" | 6'-8" | 1 3/8" | WD | B | – | – | – | WD | – | B5 | B5 | – | – | – | DOOR FINISH – PAINT |
| 305 | – | – | – | – | – | – | – | – | – | – | – | – | – | – | – | DOOR FINISH – PAINT EXG TO REMAIN, NEW LOCKABLE LATCH |
| 305A | – | – | – | – | – | – | – | – | – | – | – | – | – | – | – | DOOR FINISH – PAINT EXG TO REMAIN, NEW LOCKABLE LATCH |

# ROOM FINISH SCHEDULE

| ROOM NO. | ROOM NAME | FLOOR MAT | FLOOR COLOR NO. | BASE MAT | BASE COLOR NO. | WALLS MAT | WALLS COLOR NO. | CEILING MAT | CEILING COLOR NO. | CEILING HT | REMARKS |
|---|---|---|---|---|---|---|---|---|---|---|---|
| 001 | BASEMENT | EXG | – | – | – | – | – | GPDW | PT | – | CLG 5/8" FIRE CODE GPDW |
| 002 | BASEMENT | EXG | – | – | – | – | – | – | – | – | |
| 003 | HALL | CONC | – | WD | PT | GPDW | PT | GPDW | PT | – | |
| | | | | | | | | | | | |
| 101 | OFFICE | CARPET | – | WD | PT | GPDW | PT | GPDW | PT | – | |
| 102 | BATHROOM | SHEET VINYL | – | WD | PT | GPDW | PT | GPDW | PT | – | |
| 103 | CLOSET | CARPET | – | WD | PT | GPDW | PT | GPDW | PT | – | |
| 104 | KITCHEN/DINING | SHEET VINYL | – | WD | PT | GPDW | PT | GPDW | PT | – | |
| 105 | LIVING ROOM | CARPET | – | EXG & WD | PT | EXG & GPDW | PT | GPDW | PT | – | 3/8" PWD UNDERLAYMENT OVER EXG FLR |
| 106 | ENTRY HALL | SHEET VINYL | – | EXG & WD | PT | EXG & GPDW | PT | GPDW | PT | – | |
| 107 | OFFICE | CARPET | – | EXG & WD | PT | EXG & GPDW | PT | GPDW | PT | – | 3/8" PWD UNDERLAYMENT OVER EXG FLR |
| 109 | HALL | SHEET VINYL | – | WD | PT | GPDW | PT | GPDW | PT | – | |
| | | | | | | | | | | | |
| 201 | BEDROOM | CARPET | – | WD | PT | GPDW | PT | GPDW | PT | – | |
| 202 | CLOSET | CARPET | – | WD | PT | GPDW | PT | GPDW | PT | – | |
| 203 | BATHROOM | SHEET VINYL | – | WD | PT | GPDW | PT | GPDW | PT | – | |
| 204 | CLOSET | SHEET VINYL | – | WD | PT | GPDW | PT | GPDW | PT | – | |
| 205 | BEDROOM | CARPET | – | WD | PT | GPDW | PT | GPDW | PT | – | |
| 206 | CLOSET | CARPET | – | WD | PT | GPDW | PT | GPDW | PT | – | |
| 207 | HALL | CARPET | – | EXG & WD | PT | GPDW | PT | GPDW | PT | – | 3/8" PWD UNDERLAYMENT OVER EXG FLR |
| 208 | BEDROOM | CARPET | – | EXG & WD | PT | GPDW | PT | GPDW | PT | – | 3/8" PWD UNDERLAYMENT OVER EXG FLR |
| 209 | CLOSET | CARPET | – | WD | PT | GPDW | PT | GPDW | PT | – | 3/8" PWD UNDERLAYMENT OVER EXG FLR |
| 210 | BEDROOM | CARPET | – | EXG & WD | PT | EXG | PT | GPDW | PT | – | 3/8" PWD UNDERLAYMENT OVER EXG FLR |
| 211 | CLOSET | CARPET | – | EXG | PT | GPDW | PT | GPDW | PT | – | 3/8" PWD UNDERLAYMENT OVER EXG FLR |
| 212 | HALL | CARPET | – | WD | PT | GPDW | PT | GPDW | PT | – | HD WD FLOORING @ STAIR INT. LANDING |
| | | | | | | | | | | | |
| 301 | BEDROOM | CARPET | – | EXG & WD | PT | EXG & GPDW | PT | EXG & GPDW | PT | – | 3/8" PWD UNDERLAYMENT OVER EXG FLR – PATCH CLGS. AS NECESSARY |
| 302 | CLOSET | CARPET | – | EXG | PT | EXG | PT | EXG | PT | – | 3/8" PWD UNDERLAYMENT OVER EXG FLR – PATCH CLGS. AS NECESSARY |
| 303 | BEDROOM | CARPET | – | EXG & WD | PT | EXG/GPDW | PT | EXG/GPDW | PT | – | 3/8" PWD UNDERLAYMENT OVER EXG FLR – PATCH CLGS. AS NECESSARY |
| 304 | CLOSET | CARPET | – | EXG | PT | EXG | PT | EXG | PT | – | 3/8" PWD UNDERLAYMENT OVER EXG FLR – PATCH CLGS. AS NECESSARY |
| 305 | HALL | CARPET | – | EXG & WD | PT | EXG/GPDW | PT | EXG & GPDW | PT | – | HD WD FLOORING @ STAIR INT. LANDING – PATCH CLGS. AS NECESSARY |
| | | | | | | | | | | | NOTE: NEW TRIM TO MATCH EXG TRIM PROFILES. |

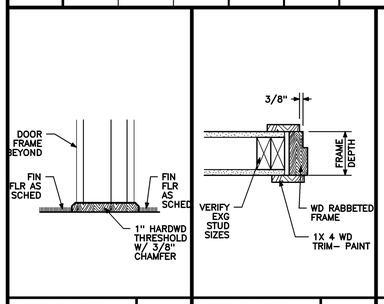


DOOR DETAIL — 1 1/2" = 1'-0" — B6

DOOR DETAIL — 1 1/2" = 1'-0" — B5

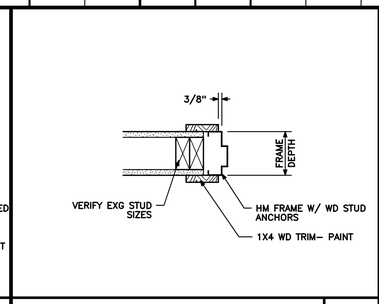


DOOR DETAIL — 1 1/2" = 1'-0" — 0 4" 8" 1' — REF: NA — B4

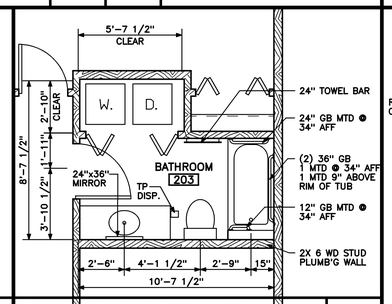


ENLARGED BATHROOM 203 — 1/4" = 1'-0" — 0 2' 4' 6' — REF: NA — B3

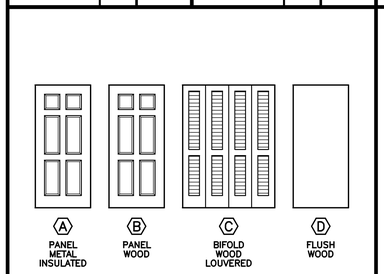


DOOR TYPES — 1/4" = 1'-0" — 0 2' 4' 6' — REF: NA — A5

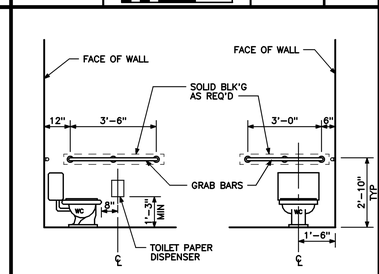


ACCESSORY MOUNTING HEIGHTS — NO SCALE — REF: NA — A4

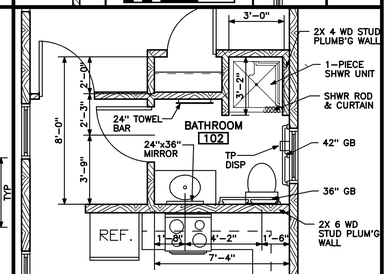


ENLARGED BATHROOM 102 — 1/4" = 1'-0" — 0 2' 4' 6' — REF: NA — A3

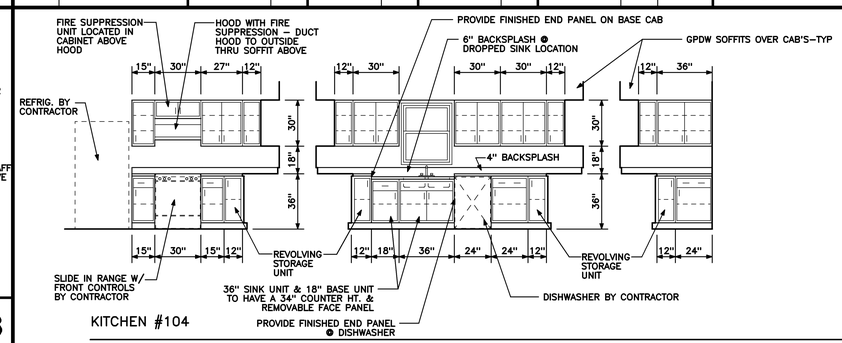


KITCHEN #104

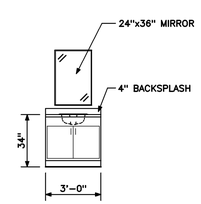


BATHROOM #102

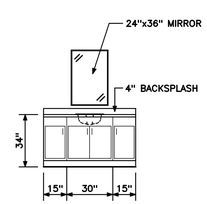


BATHROOM #203

GENERAL NOTES:

ALL BASE CABINETS SHALL BE 24" DEEP AND ALL WALL CABINETS SHALL BE 12" DEEP UNLESS NOTED OTHERWISE

THE CONTRACTOR SHALL FIELD VERIFY ALL DIMENSIONS PRIOR TO FABRICATION OF CASEWORK.

ALL COUNTER TOPS AND BACK SPLASHES SHALL BE PLASTIC LAMINATE OVER 3/4" PLYWOOD.

PROVIDE FINISHED PANELS ON ALL EXPOSED CABINET PANELS.

PROVIDE FILLER PANELS AS NECESSARY.

CASEWORK — 1/4" = 1'-0" — 0 2' 4' 6' — REF: NA — A1


Architects + Engineers

HARRIMAN ASSOCIATES

One Auburn Business Park
Auburn, Maine 04210

207.784.5100 tel
207.782.3017 fax
www.harriman.com

Building communities since 1970


© 2004

Project Title

**BRACKETT ST. RESIDENCE RENOVATIONS**

PORTLAND, MAINE

HA Project No. 03171

Key Plan

| Mark | Date | Description |
|---|---|---|
| – | 10-18-04 | ISSUED FOR BID |

Issue Dates

Drawing Status

Drawing Title

**SCHEDULES & DETAILS**

PA / PE: RJF — Drawn By: RJF/mcm

Drawing Number

**A60.1**