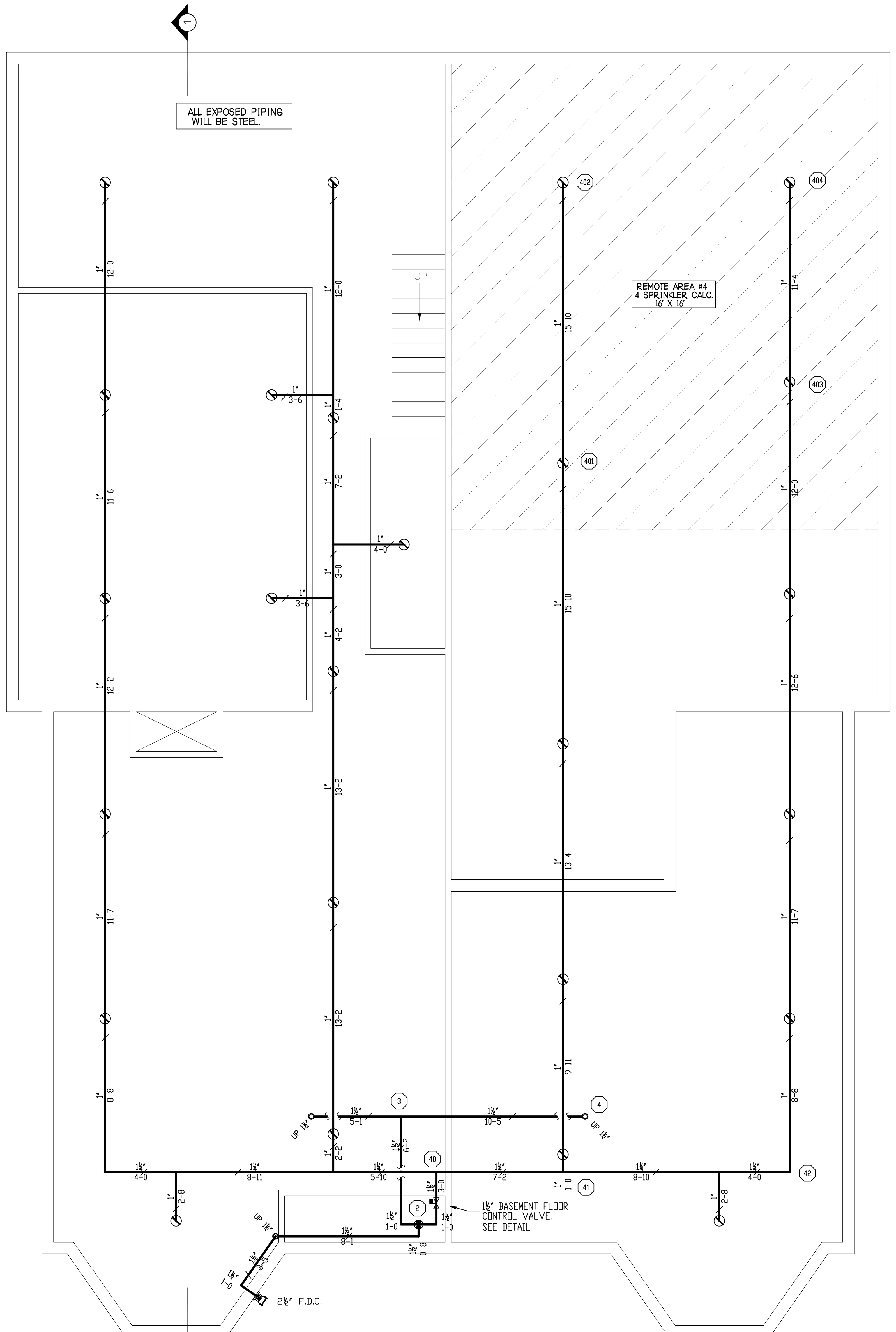

BASEMENT FIRE PROTECTION

SCALE 1/4"=1'-0"

QUANTITY ⊘ = 25

HYDRAULIC DESIGN DATA	
System # & Area	#1 - #4 BASEMENT
No. of Sprinklers	4
Density	0.05 GPM
Designed Area	ROOM
Hose Allowance	N/A GPM
Water Flow Rate	54 GPM
Residual Pressure at Base of Riser	48 PSI
Safety Factor at Base of Riser	11.84 PSI

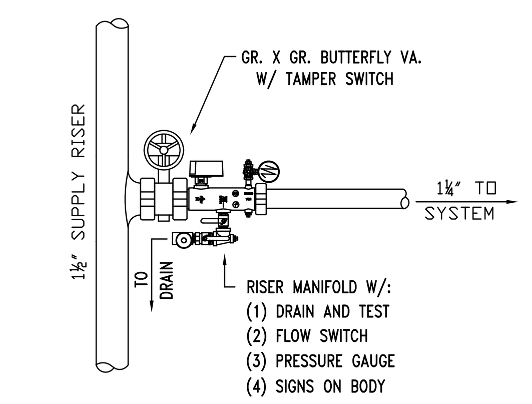

GROUND FLOOR CONTROL VALVE

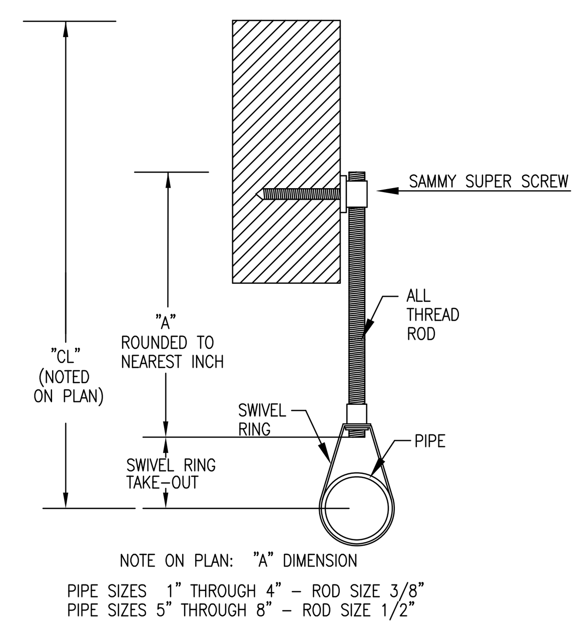

TYPE #10 HANGER

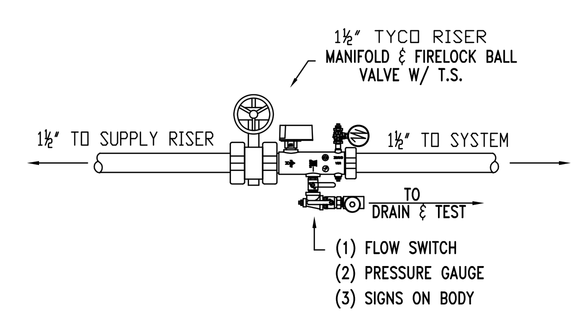

BASEMENT FLOOR CONTROL VALVE

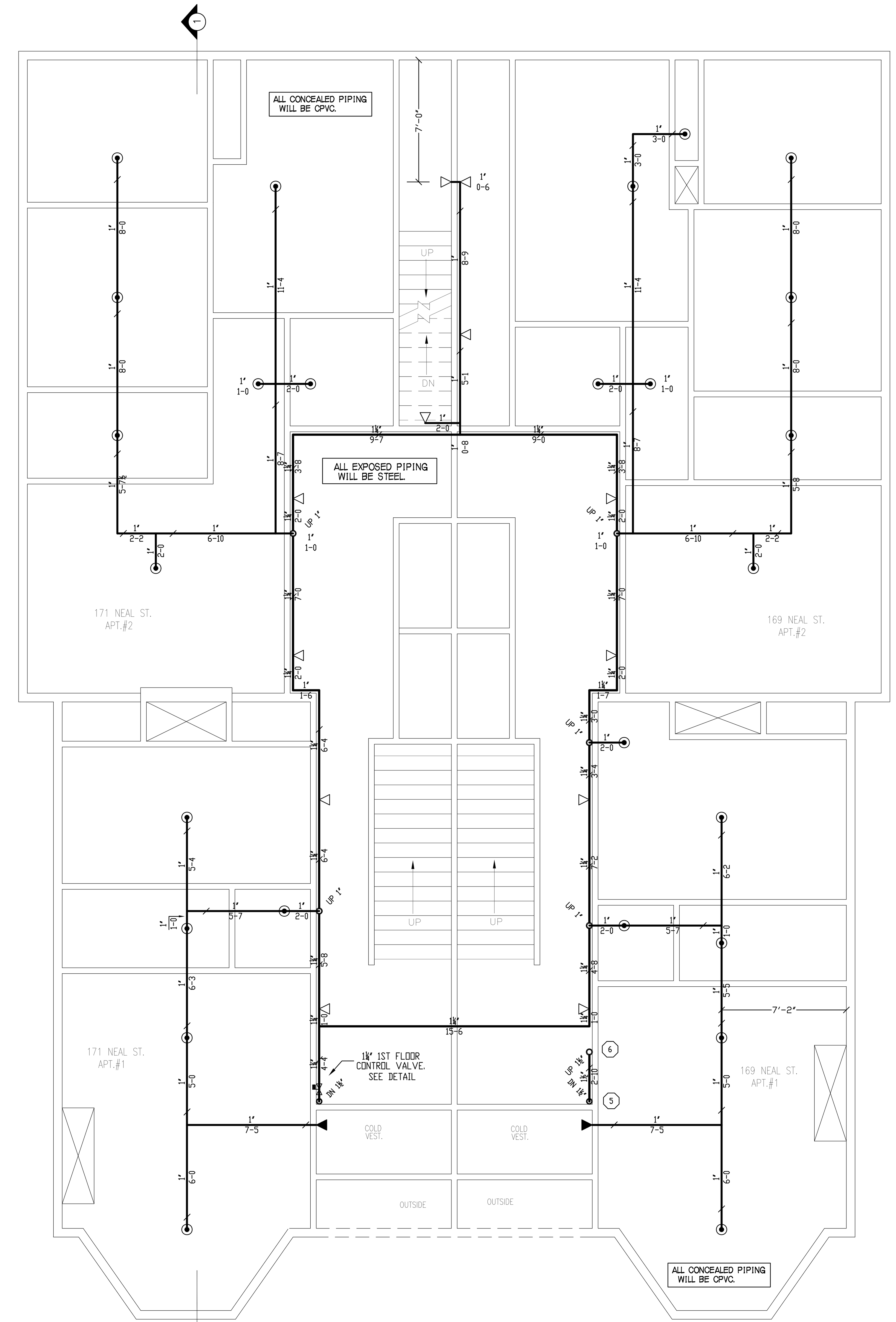

GROUND FLOOR FIRE PROTECTION

SCALE 1/4"=1'-0"

QUANTITY ⊙ = 26
QUANTITY ◁ = 12
QUANTITY ◀ = 2

REVISIONS	NOTES
	K=4.9 PENDANT SPRINKLER COVERAGE: 16'X16'
	K=4.4 SIDEWALL SPRINKLER COVERAGE: 14'X14'

SPRINKLER TYPE	IDENTIFICATION NO.	MFG.	ESC.	MODEL	FINISH	ORIFICE	TEMP.	SYMBOL	QUANT.
HEAD COUNT									
QUICK RESP. PENDANT K= 4.9	TY2234	TYCO	N/A	LFII	BRASS	1/2"	155°	⊘	25
QUICK RESP. PENDANT K= 4.9	TY2234	TYCO	SEMI-REC.	LFII	BRASS	1/2"	155°	⊙	26
QUICK RESP. SIDEWALL K= 4.4	TY2334	TYCO	2 PIECE	LFII	BRASS	1/2"	155°	◁	12
Q.R.DRY SIDEWALL K= 4.4	TY2335	TYCO	N/A	LFII	BRASS	1/2"	155°	◀	2
TOTAL SPRINKLERS THIS DRAWING									65

STANDARD SYMBOLS
- POST INDICATOR VALVE
- KEY VALVE
- FIRE HYDRANT
- FIRE DEPT. CONNECTION
- O.S. & Y GATE VALVE
- SWING CHECK VALVE
- NEW UNDERGROUND
- EXIST UNDERGROUND

STANDARD SYMBOLS
- ALARM CHECK VALVE
- RISER W/ALARM VALVE
- RISER W/DRY VALVE
- RISER W/ELEC. FLOW SWITCH
- RISER W/DELUGE VALVE
- WATER MOTOR BELL
- ELECTRIC BELL
- FLUSH FIRE DEPT. CONNECTION

INSPECTIONS
1.
2.
3.
4.
5.
RESPONSIBLE MANAGING SUPERVISOR #348
CONTRACTOR LICENSE #295

171 & 169 NEAL STREET
PORTLAND, MAINE 04102

FIRE PROTECTION PLAN

FREEDOM FIRE PROTECTION, INC.
209 QUAKER RIDGE ROAD
CASCO, MAINE 04015

JOB No.	M0101
DATE	12/13/12
DRAWN BY	MJN
SCALE	AS NOTED
SHEET No.	FP-2of3