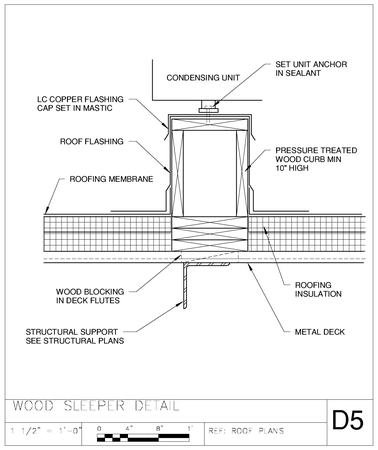

3 WOOD SLEEPER DETAIL
1 1/2" = 1'-0"

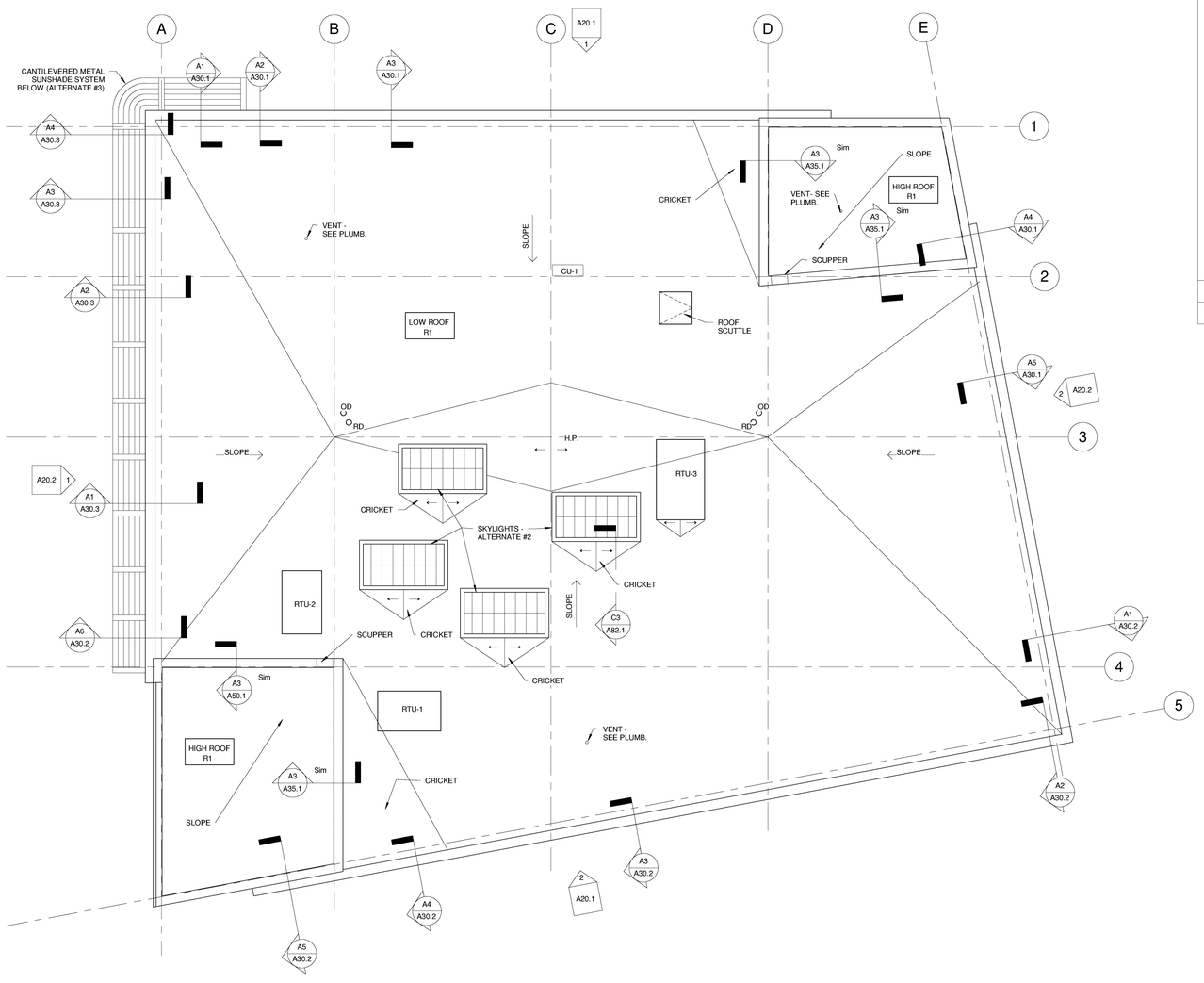

1 Roof Plan
3/16" = 1'-0"

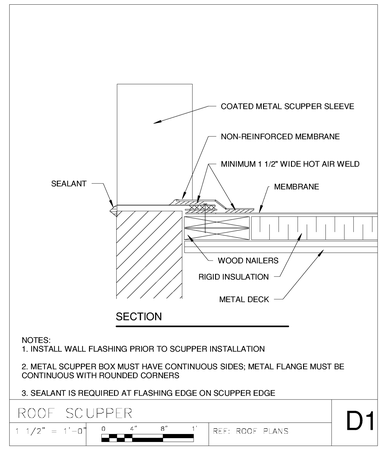

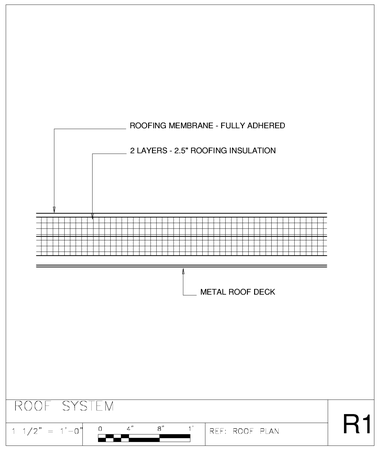

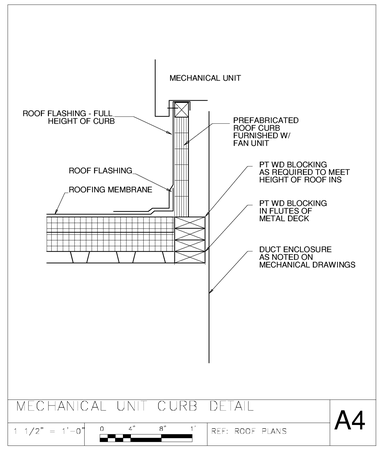

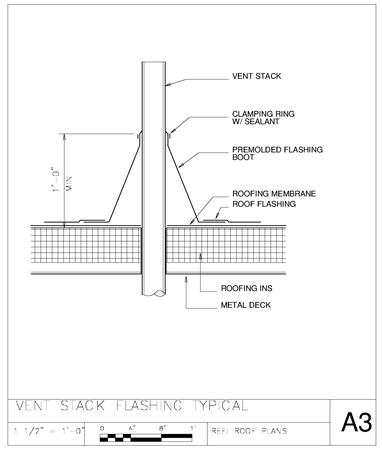

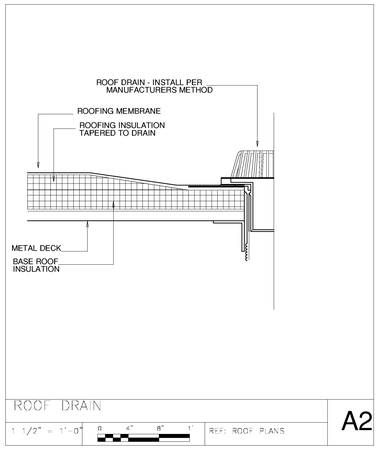

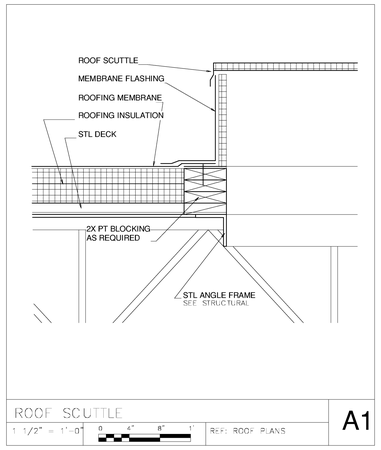

2 ROOF DETAILS
1 1/2" = 1'-0"

Architects + Engineers

HARRIMAN ASSOCIATES

One Auburn Business Park
Auburn, ME 04210
PH: 207.784.5100
Fax: 207.782.3017

66 Pearl Street, Suite 301
Portland, ME 04101
PH: 207.784.5100
Fax: 207.775-0460

Maine Heart Surgical Associates

New Office Building

Portland, ME

Project Number 04180

Key Plan

PROJECT NORTH

General Notes:

No.	Description	Date
	ISSUED FOR BID	4-28-05

Drawing Status:

Roof Plan and Details

Issue Date:	04-28-05
Drawn By:	WFA
PA / PE:	PSC

A15.1

Scale As indicated

4/28/2005 2:44:59 PM