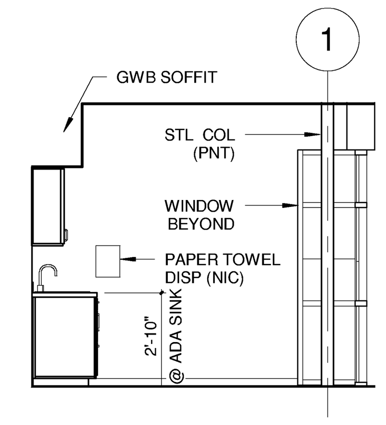

D2 STAFF LOUNGE
1/4" = 1'-0"

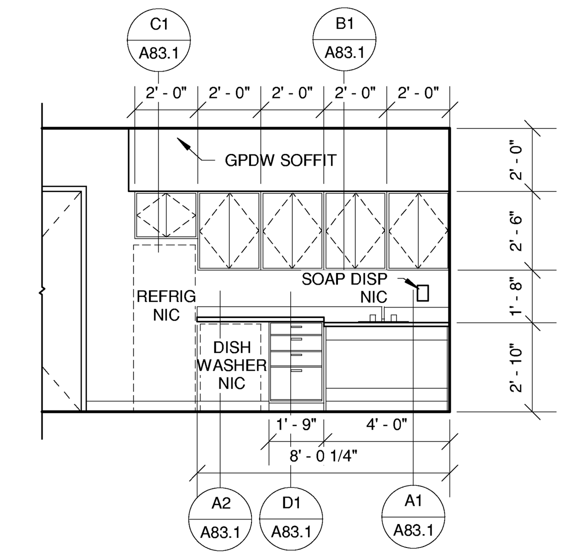

D1 STAFF LOUNGE
1/4" = 1'-0"

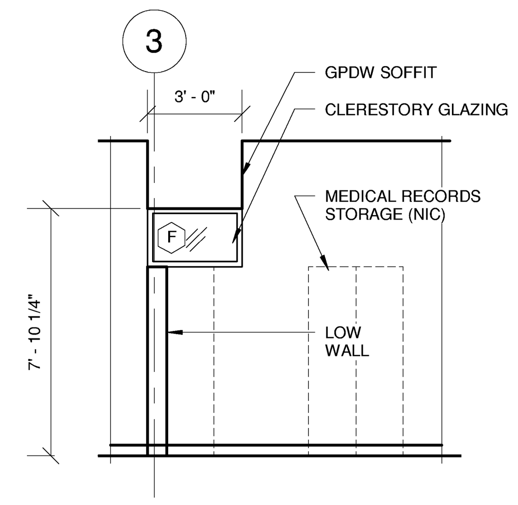

C3 OPEN WORK AREA
1/4" = 1'-0"

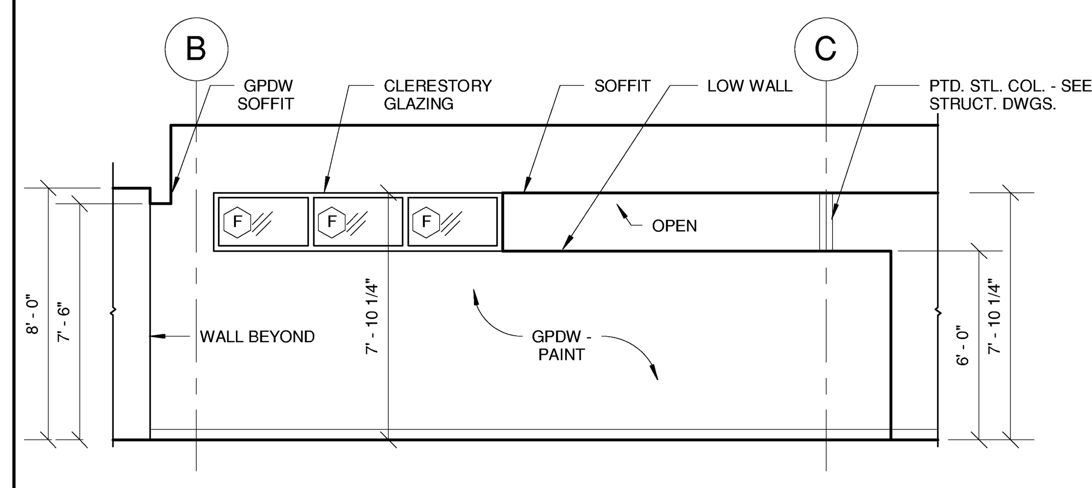

C2 OPEN WORK AREA
1/4" = 1'-0"

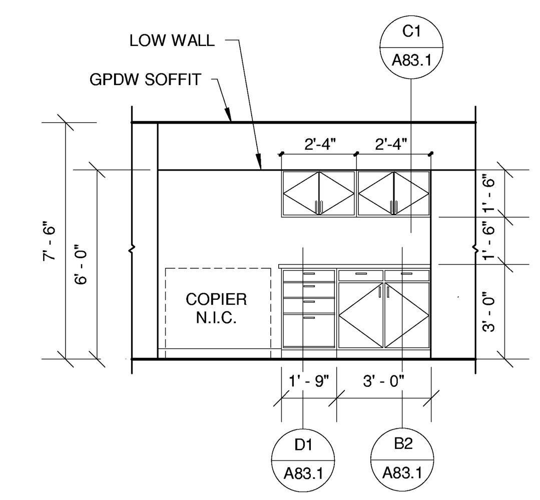

C1 OPEN WORK AREA
1/4" = 1'-0"

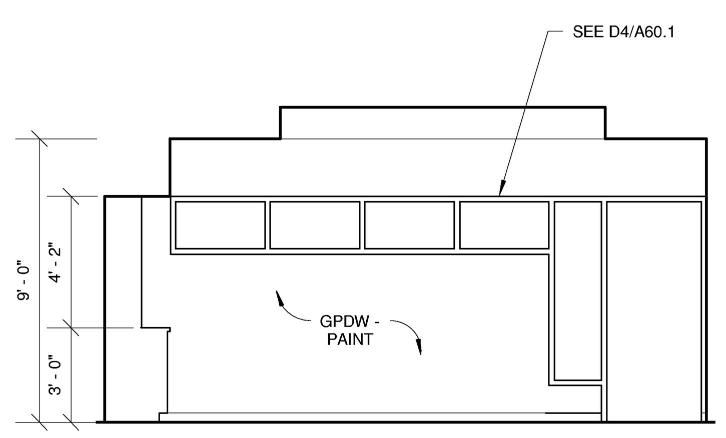

B3 CONFERENCE 2
1/4" = 1'-0"

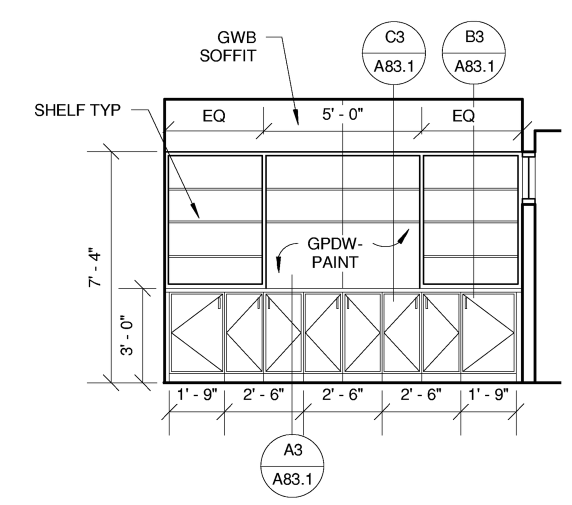

B2 CONFERENCE ROOM
1/4" = 1'-0"

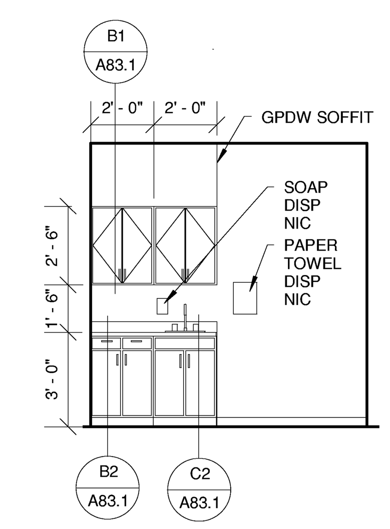

B1 TYPICAL EXAM ROOM
1/4" = 1'-0"

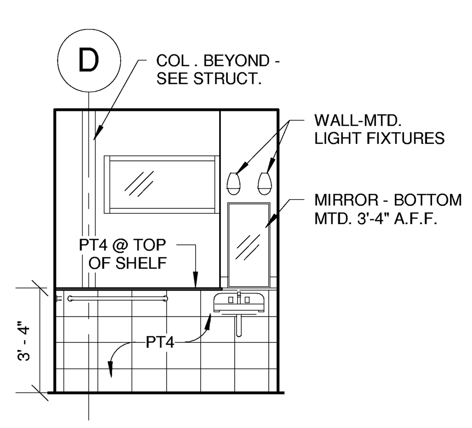

A4 TOILET ROOM 301
1/4" = 1'-0"

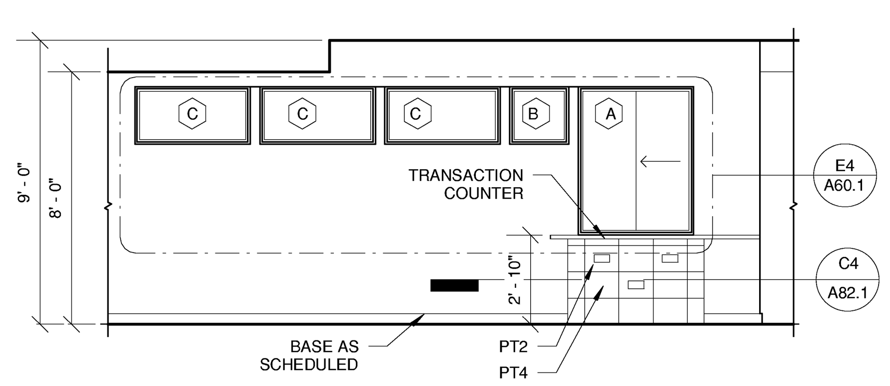

A3 WAITING
1/4" = 1'-0"

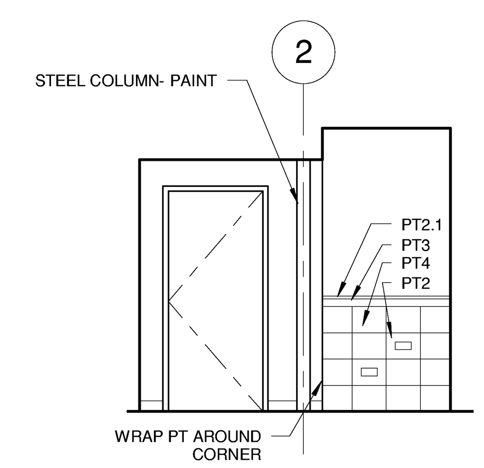

A2 LOBBY 303 @ STAIR 1
1/4" = 1'-0"

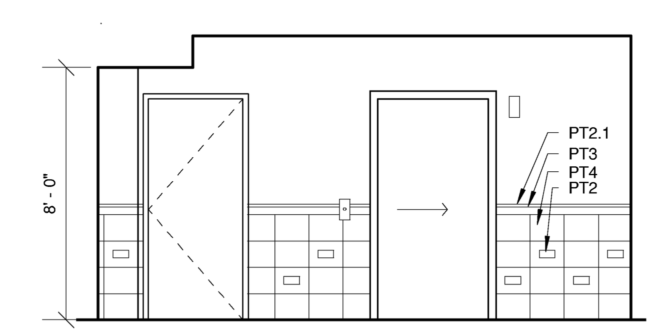

A1 LOBBY 303
1/4" = 1'-0"

Architects + Engineers
HARRIMAN ASSOCIATES
One Auburn Business Park
Auburn, ME 04210
PH: 207.784.5100
Fax: 207.782.3017
66 Pearl Street, Suite 301
Portland, ME 04101
PH: 207.784.5100
Fax: 207.775-0460

Maine Heart Surgical Associates

New Office Building

Portland, ME

Project Number 04180

Key Plan

LICENSED ARCHITECT
PATRICK SEAN COSTIN
No. 2026
STATE OF MAINE

General Notes:

No.	Description	Date
	ISSUED FOR BID	4-28-05

Drawing Status:

Interior Elevations

Issue Date: 04-28-05

Drawn By: JGJ

PA / PE: PSC

A81.1

Scale 1/4" = 1'-0"

4/28/2005 2:49:29 PM