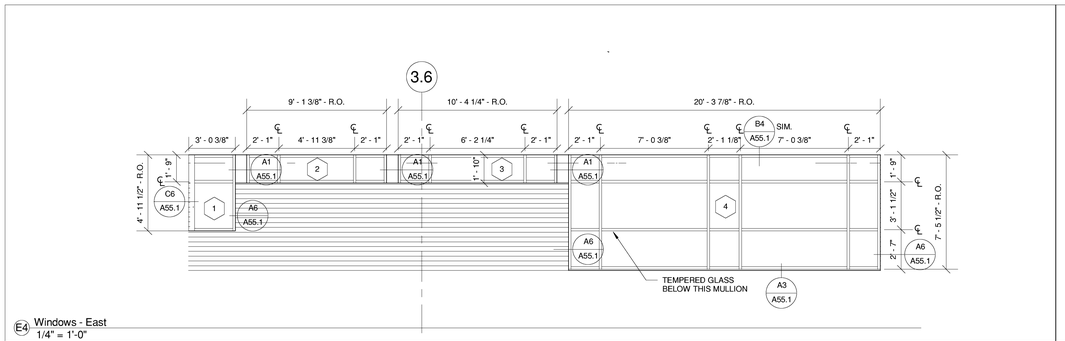

E4 Windows - East
1/4" = 1'-0"

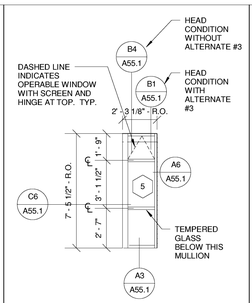

E3 Windows - West 1
1/4" = 1'-0"

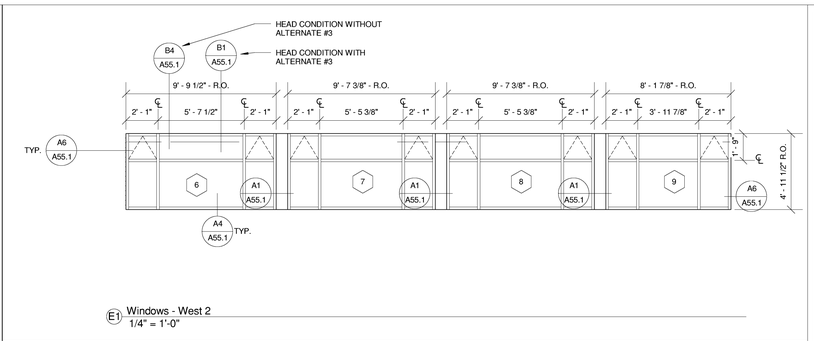

E1 Windows - West 2
1/4" = 1'-0"

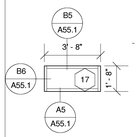

D7 Windows - South 1
1/4" = 1'-0"

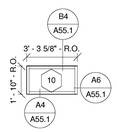

D6 Windows - South 2
1/4" = 1'-0"

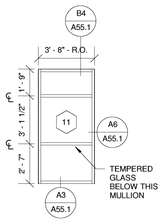

D5 Windows - South 3
1/4" = 1'-0"

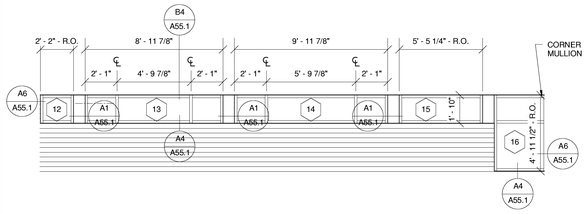

D4 Windows - South4
1/4" = 1'-0"

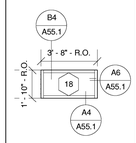

D3 Windows - North 1
1/4" = 1'-0"

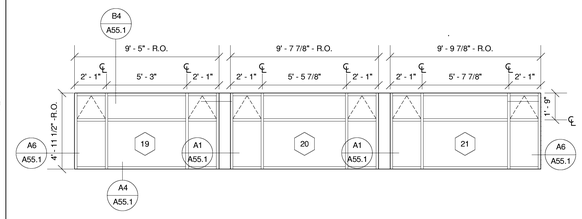

D2 Windows - North 2
1/4" = 1'-0"

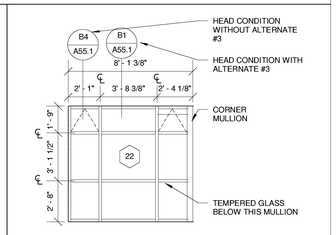

D1 Windows - North 3
1/4" = 1'-0"

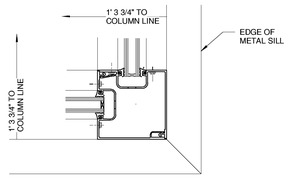

C8 CORNER MULLION
3" = 1'-0"

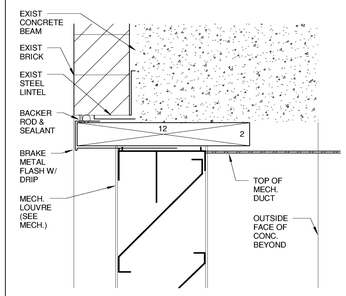

C3 louver Head Detail
3" = 1'-0"

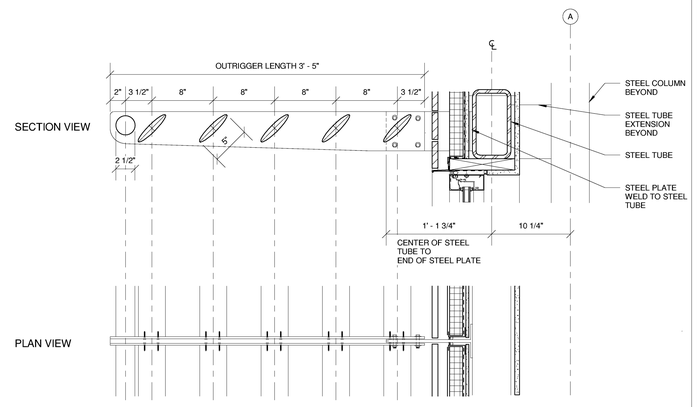

B1 SUNSCREEN DETAILS ALTERNATE #3
1 1/2" = 1'-0"

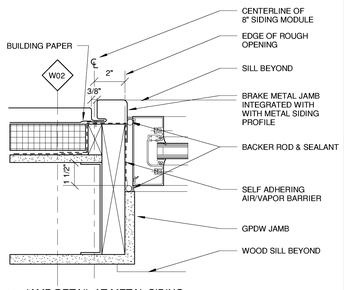

B6 JAMB DETAIL AT METAL SIDING
3" = 1'-0"

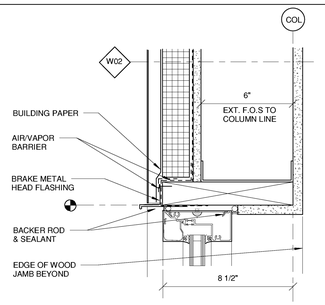

B5 HEAD DETAIL AT METAL SIDING
3" = 1'-0"

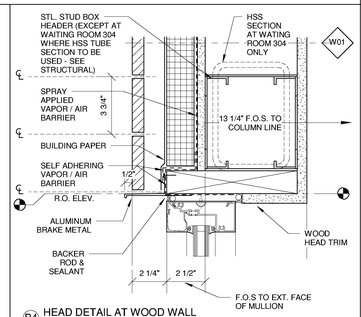

B4 HEAD DETAIL AT WOOD WALL
3" = 1'-0"

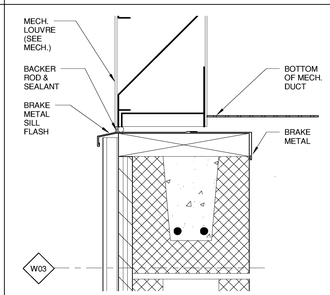

B3 louver Sill Detail
3" = 1'-0"

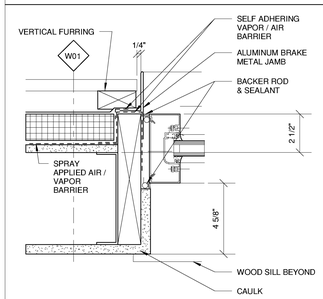

A6 JAMB DETAIL AT WOOD WALL
3" = 1'-0"

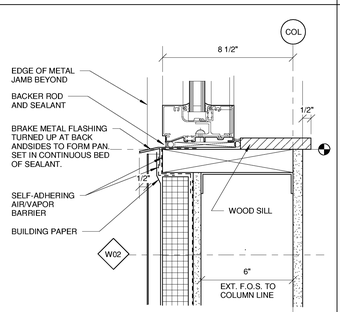

A5 SILL DETAIL AT METAL WALL
3" = 1'-0"

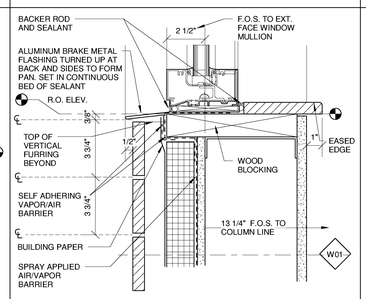

A4 SILL DETAIL AT WOOD WALL
3" = 1'-0"

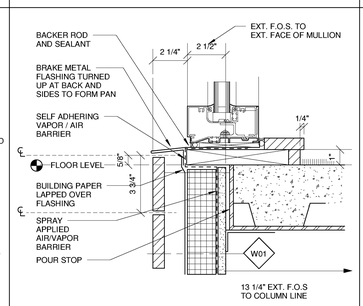

A3 SILL DETAIL AT THIRD FLOOR SLAB
3" = 1'-0"

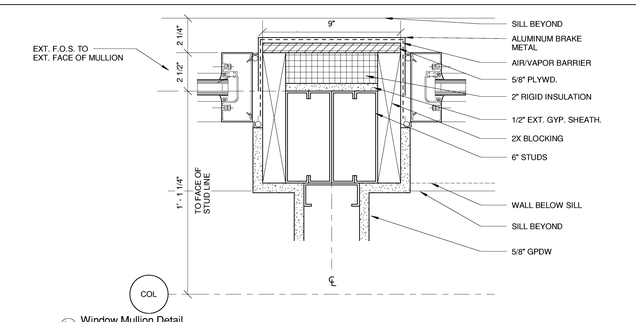

A1 Window Mullion Detail
3" = 1'-0"

Architects + Engineers

HARRIMAN ASSOCIATES

One Auburn Business Park
Auburn, ME 04210
PH: 207.784.5100
Fax: 207.782.3017

66 Pearl Street, Suite 301
Portland, ME 04101
PH: 207.784.5100
Fax: 207.775-0460

Maine Heart Surgical Associates

New Office Building

Portland, ME

Project Number 04180

Key Plan

LICENSED ARCHITECT PATRICK SEAN PORTIN No. 2025 STATE OF MAINE

General Notes:

1. ALL OPERABLE WINDOWS TO BE FITTED WITH SCREENS

2. ALL ROUGH OPENING (R.O.) MEASUREMENTS INDICATED ON THIS DRAWING ARE ACTUAL DIMENSIONS. WINDOW MFR. TO MAKE APPROPRIATE DEDUCTIONS FROM R.O. DIMENSIONS TO ENSURE PROPER TOLERANCES AND FIT.

No.	Description	Date
	ISSUED FOR BID	4-28-05

Drawing Status:

Window Elevations and Details

Issue Date: 04-28-05

Drawn By: TH

PA / PE: PSC

A55.1

Scale As indicated

4/28/2005 2:48:19 PM